NATIONAL

PROUDLY MADE IN THE USA

COLONIAL® GAS
STEAM SERIES

INSTALLATION INSTRUCTIONS

These instructions must be affixed on or adjacent to the boiler

Models:

- **CGSA-57-S2**
- **CGSA-85-S2**
- **CGSA-113-S2**
- **CGSA-142-S2**
- **CGSA-171-S2**
- **CGSA-199-S2**
- **CGSA-229-S2**
- **CGSA-240-S2**
- **CGSA-267-S2**
- **CGSA-294-S2**

WARNING: Improper installation, adjustment, alteration, service or maintenance can cause property damage, injury, or loss of life. For assistance or additional information, consult a qualified installer, service agency or the gas supplier. Read these instructions carefully before installing.

AHRI CERTIFIED™
www.ahridirectory.org

ETL LISTED US
Intertek
9902339

IMPORTANT INFORMATION - READ CAREFULLY

NOTE: The equipment shall be installed in accordance with those installation regulations enforced in the area where the installation is to be made. These regulations shall be carefully followed in all cases. Authorities having jurisdiction shall be consulted before installations are made.

All wiring on boilers installed in the USA shall be made in accordance with the National Electrical Code and/or local regulations.

All wiring on boilers installed in Canada shall be made in accordance with the Canadian Electrical Code and/or local regulations.

The City of New York requires a Licensed Master Plumber supervise the installation of this product.

The Commonwealth of Massachusetts requires this product to be installed by a Licensed Plumber or Gas Fitter.

The following terms are used throughout this manual to bring attention to the presence of hazards of various risk levels, or to important information concerning product life.

DANGER

Indicates an imminently hazardous situation which, if not avoided, will result in death, serious injury or substantial property damage.

CAUTION

Indicates a potentially hazardous situation which, if not avoided, may result in moderate or minor injury or property damage.

WARNING

Indicates a potentially hazardous situation which, if not avoided, could result in death, serious injury or substantial property damage.

NOTICE

Indicates special instructions on installation, operation, or maintenance which are important but not related to personal injury hazards.

DANGER

Explosion Hazard. DO NOT store or use gasoline or other flammable vapors or liquids in the vicinity of this or any other appliance.

If you smell gas vapors, DO NOT try to operate any appliance - DO NOT touch any electrical switch or use any phone in the building. Immediately, call the gas supplier from a remotely located phone. Follow the gas supplier's instructions or if the supplier is unavailable, contact the fire department.

WARNING

This boiler must only be serviced and repaired by skilled and experienced service technicians.

If any controls are replaced, they must be replaced with identical models.

Read, understand and follow all the instructions and warnings contained in all the sections of this manual.

If any electrical wires are disconnected during service, clearly label the wires and assure that the wires are reconnected properly.

Never jump out or bypass any safety or operating control or component of this boiler.

Assure that all safety and operating controls and components are operating properly before placing the boiler back in service.

Annually inspect all venting and replace any exhibiting damage or deterioration.

WARNINGS FOR THE HOMEOWNER

FOLLOW ALL INSTRUCTIONS and warnings printed in this manual and posted on the boiler.

INSPECT THE BOILER ANNUALLY. To keep your boiler safe and efficient, have a service technician follow the Service checklist near the end of this manual.

IF YOU ARE NOT QUALIFIED to install or service boilers, do not install or service this one.

THE BOILER MAY LEAK WATER at the end of its useful life. Be sure to protect walls, carpets, and valuables from water that could leak from the boiler.

PROTECT YOUR HOME IN FREEZING WEATHER. A power outage, safety lockout, or component failure will prevent your boiler from lighting. In winter, your pipes may freeze and cause extensive property damage. Do not leave the heating system unattended during cold weather unless alarms or other safeguards are in place to prevent such damage

DO NOT BLOCK AIR FLOW into or around the boiler. Insufficient air may cause the boiler to produce carbon monoxide or start a fire.

KEEP FLAMMABLE LIQUIDS AWAY from the boiler, including paint, solvents, and gasoline. The boiler may ignite the vapors from the liquids causing explosion or fire.

KEEP CHILDREN AND PETS away from hot surfaces of the boiler, boiler piping, and vent pipe.

CARBON MONOXIDE (CO) is an odorless, deadly gas that may be introduced into your home by any malfunctioning fuel-burning product or vent system failure. Consider installing CO alarms near bedrooms in all levels of the building to warn you and your family of potential CO exposure.

WARNINGS FOR THE INSTALLER

READ THIS ENTIRE MANUAL before attempting installation, start-up, or service. Improper installation, adjustment, alteration, service, or maintenance may cause serious property damage, personal injury, or death.

DO NOT DISCONNECT PIPE FITTINGS on the boiler or in the heating system without first verifying that the system is cool and free of pressure and that your clothing will protect you from a release of hot water or steam. Do not rely solely on the boiler's temperature and pressure gage when making this judgment.

USE PROPER PERSONAL PROTECTION EQUIPMENT when servicing or working near the boiler. Materials of construction, flue products, and fuel contain alumina, silica, heavy metals, carbon monoxide, nitrogen oxides, and/or other toxic or harmful substances that can are hazardous to health and life and that are known to the State of California to cause cancer, birth defects, and other reproductive harm.

INSTALL ALL GUARDS, cover plates, and enclosures before operating the boiler.

SIZE THE BOILER PROPERLY relative to the design heat load or, if using domestic hot water priority, the peak hot water load, whichever is larger. A grossly oversized boiler will cycle excessively and this will lead to premature failure of the boiler and its components. Our warranty does not apply to damage from excessive cycling.

ADHERE TO ALL LOCAL CODE REQUIREMENTS. Contact your local code inspector prior to installation. In the absence of a local code, adhere to the *National Fuel Gas Code ANSI Z223.1/NFPA 54* or *CAN/CSA B149.1, Natural Gas and Propane Installation Code.*

ALL WIRING must comply with the *National Electrical Code ANSI/NFPA 70* (in the USA) or the *Canadian Electrical Code CSA C22.1* (in Canada) and any local regulations.

Table of Contents

I. Product Description 2

II. Specifications 3

III. Before Installing 4

IV. Locating the Boiler 4

V. Air for Combustion & Ventilation 5

VI. Venting 9

VII. Gas Piping 12

VIII. System Piping 13

IX. Indirect Water Heater Piping..... 16

X. Wiring 17

XI. Start-Up & Checkout 22

XII. Service & Maintenance 28

XIII. Troubleshooting 31

XIV. Parts 36

I Product Description

The CGSA series boilers are low pressure cast iron gas fired steam boilers designed for use in closed steam heating systems. These boilers are Category I draft diverter equipped appliances, which must be vented by natural draft using a lined masonry or listed metal chimney system. An adequate supply of air for combustion, ventilation and dilution of flue gases must be available in the boiler room. These boilers are not designed for use in process or other “open” steam systems

II Specifications

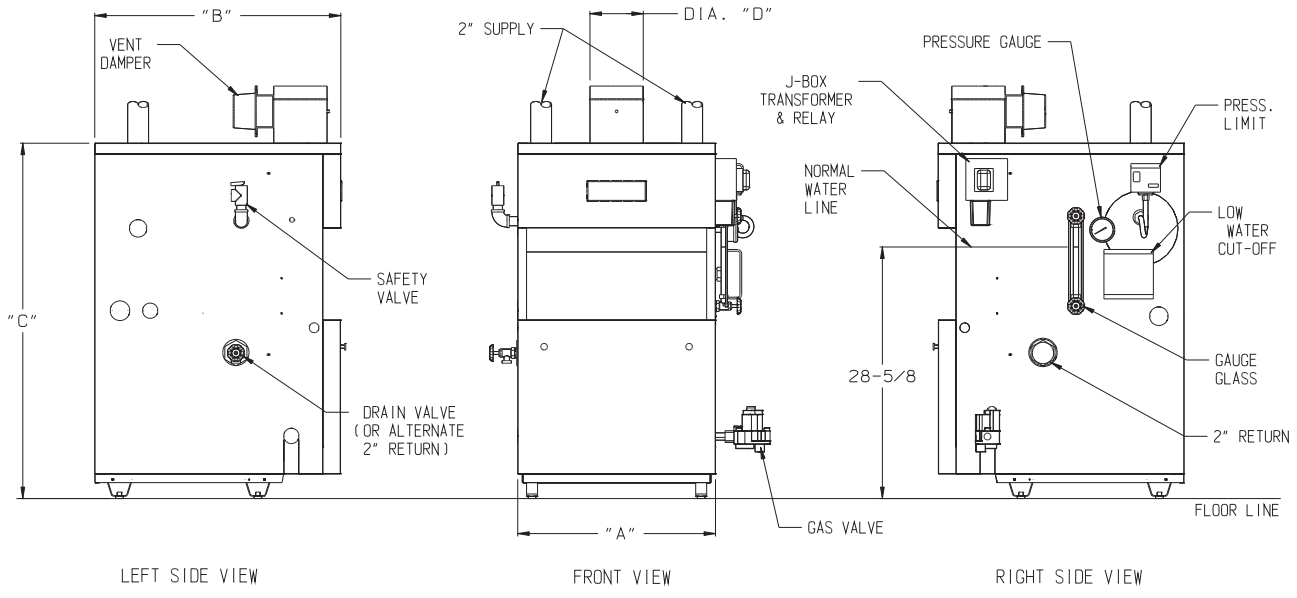

FIGURE 1: GENERAL CONFIGURATION

TABLE 1: SPECIFICATIONS

CGSA SPACE HEATING RATINGS (AHRI CERTIFIED www.ahridirectory.org)						NUMBER OF SECTIONS	DIMENSIONS (in.)				WATER VOL. **
BASIC BOILER MODEL*****	INPUT (MBH)	HEATING CAPACITY (MBH)	NET AHRI RATING, STEAM**** (Sq. ft)	(MBH)	AFUE %		"A"	"B"	"C"	"D"	(Gal)
CGSA-57-S2	69	57	179	43	81.9	3	12 3/4	28	40 7/16	4	5.1
CGSA-85-S2	103	85	267	64	82.0	4	16	28	40 7/16	5	6.5
CGSA-113-S2	138	113	354	85	82.0	5	19 1/4	28	40 7/16	6	7.9
CGSA-142-S2	172	142	446	107	82.1	6	22 1/2	28	40 7/16	6	9.3
CGSA-171-S2	207	171	533	128	82.1	7	25 3/4	30	40 7/16	7	10.7
CGSA-199-S2	241	199	621	149	82.2	8	29	30	40 7/16	7	12.1
CGSA-229-S2	276	229	717	172	82.2	9	32 1/4	30	40 7/16	8	13.5
CGSA-240-S2***	310	240	750	180	77.5*	10	35 1/2	30	45 7/16	8	14.9
CGSA-267-S2***	345	267	833	200	77.5*	11	38 3/4	30	45 7/16	9	16.3
CGSA-294-S2***	379	294	921	221	77.5*	12	42	30	45 7/16	9	17.7

* Thermal efficiency

** Volume to normal water line

*** CGSA-240 - CGSA-294 Not for use with LP gas

**** AHRI Net Ratings are based on a piping and pick-up allowance of 1.333.

***** Add Suffix NI for Natural Gas or Suffix PI for Propane Gas to basic Boiler Model shown (Example: CGSA-199-S2-NI, CGSA-199-S2-PI)

III Before Installing

1) Safe, reliable operation of this boiler depends upon installation by a professional heating contractor in strict accordance with this manual and the requirements of the authority having jurisdiction.

- In the absence of an authority having jurisdiction, installation must be in accordance with this manual and the *National Fuel Gas Code*, ANSI Z223.1-latest edition.
- Where required by the authority having jurisdiction, this installation must conform to the *Standard for Controls and Safety Devices for Automatically Fired Boilers* (ANSI/ASME CSD-1)-latest edition.

2) Make sure that a properly sized chimney is available which is in good condition. Consult the authority having jurisdiction, Part VI of this manual, and the *National Fuel Gas Code* for additional information on venting requirements.

3) Make sure that the boiler is correctly sized. Use an industry accepted sizing method such as the *I=B=R* Guide RHH published by the Air-Conditioning, Heating and Refrigeration Institute (AHRI).

4) Make sure that the boiler received is configured for the correct gas (natural or LP). The CGSA-240-S2, CGSA-267-S2 and the CGSA-294-S2 may only be used with natural gas.

5) This boiler is not designed for installation at altitudes above 2000 ft.

WARNING

DO NOT ATTEMPT TO INSTALL THIS BOILER AT ALTITUDES ABOVE 2000 FT.

IV Locating the Boiler

WARNING

FAILURE TO OBSERVE THE FOLLOWING LOCATION REQUIREMENTS COULD RESULT IN A FIRE, EXPLOSION OR CARBON MONOXIDE (CO) HAZARD.

1) Clearances:
   - Observe the minimum clearances shown below. These clearances apply to all combustible construction, as well as noncombustible walls, ceilings and doors. Also see Figure 2.

     Front – 18”
     Right Side – 18”
     Left Side – 6”
     Rear – 6”
     Top – 17”

   - A 24” service clearance from the jacket is recommended on the left, right, and front of the boiler. These clearances may be reduced to those shown in Figure 2, however servicing the boiler will become increasingly difficult as these service clearances are reduced.
   - If the right side 24” service clearance is reduced, adequate clearance must be maintained to easily read and access the controls. Alternatively, access may be provided using a door

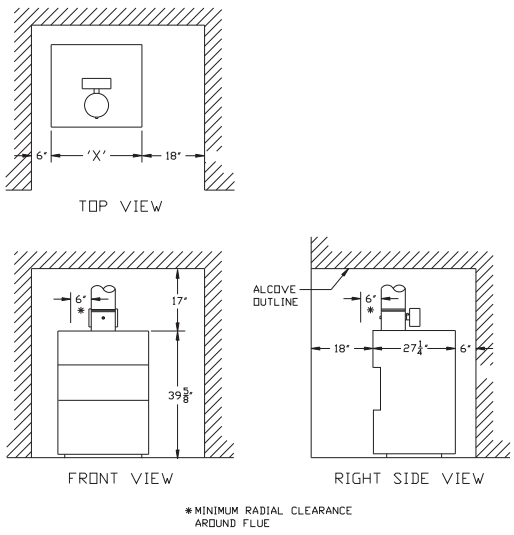

FIGURE 2: CGSA BOILERS - CLEARANCES TO ALL TYPES OF COMBUSTIBLE CONSTRUCTION AND NONCOMBUSTIBLE CEILINGS, WALLS, AND DOORS.

2) This boiler may be installed directly over a non-carpeted combustible floor.

3) The boiler must be installed on a hard level surface.

4) Do not install this boiler in a location where gasoline or other flammable vapors or liquids will be stored or used. Do not install this boiler in an area where large amounts of airborne dust will be present, such as a workshop.

5) The boiler should be located as close to the chimney as possible.

6) Do not install this boiler directly on a surface that may get wet. Raise the boiler on a pad.

V Air for Combustion and Ventilation

WARNING

- INSUFFICIENT COMBUSTION AIR SUPPLY MAY RESULT IN THE PRODUCTION AND RELEASE OF DEADLY CARBON MONOXIDE (CO) INTO THE HOME WHICH CAN CAUSE SEVERE PERSONAL INJURY OR DEATH.
- THIS BOILER IS NOT DESIGNED FOR USE IN A SPACE THAT IS DEPRESSURIZED RELATIVE TO THE OUTDOORS. OPERATING THIS BOILER IN A DEPRESSURIZED SPACE MAY CAUSE SEVERE PERSONAL INJURY OR DEATH.

Sufficient fresh air must be supplied for combustion, ventilation and flue gas dilution. Provisions for combustion, ventilation and flue gas dilution air for gas utilization equipment vented by natural draft must be made in accordance with local building codes or, in absence of such codes, in accordance with sections 5.3.3 and 5.3.4 ("Air for Combustion and Ventilation") of the *National Fuel Gas Code*, NFPA 54/ANSI Z223.1.

To ensure an adequate supply of combustion, ventilation and flue gas dilution air supply, start by determining whether the boiler is to be installed in a building of unusually tight construction. A good definition of a building of unusually tight construction is one which has all of the following features:

- Walls and ceilings exposed to outside atmosphere have a continuous water vapor retarder with a rating of 1 perm or less with openings gasketed and sealed
- Weather stripping has been added on openable windows and doors
- Caulking and sealants are applied to areas such as joints around window and door frames, between sole plates and floors, between wall-ceiling joints, between wall panels, at penetrations for plumbing, electrical, and gas lines, and at other openings.

For Buildings of Other than Unusually Tight Construction

1) Determine whether the boiler is to be installed in a confined space - A confined space is defined by the *National Fuel Gas Code* as having a volume less than 50 cubic feet per 1000 BTU/hr input of all appliances installed in that space. To determine whether the boiler room is a confined space:

a. Total the input of all appliances in the boiler room in thousands of BTU/hr. Round the result to the next highest 1000 BTU/hr.

b. Find the volume of the room in cubic feet. The volume of the room in cubic feet is:

   Length (ft) x width (ft) x ceiling height (ft)

   In calculating the volume of the boiler room, consider the volume of adjoining spaces only if no doors are installed between them. If doors are installed between the boiler room and an adjoining space, do not consider the volume of the adjoining space, even if the door is normally left open.

c. Divide the volume of the boiler room by the input in thousands of BTU/hr. If the result is less than 50, the boiler room is a confined space.

   Example:

   A CGSA-142-S2 and a water heater are to be installed in a room measuring 6 ft - 3 in x 7 ft with an 8 ft ceiling. The water heater has an input of 30000 BTU/hr:

   Total input in thousands of BTU/hr = (172000 BTU/hr + 30000 BTU/hr)/1000 = 202

   Volume of room = 6.25 ft x 7 ft x 8 ft = 350 ft^3

   350/202 = 1.73. Since 1.73 is less than 50, the boiler room is a confined space.

2) Unconfined Space - Natural infiltration into the boiler room will normally provide adequate air for combustion and ventilation without additional louvers or openings into boiler room.

3) Confined Space - Provide two openings into the boiler room, one near the floor and one near the ceiling. The top edge of the upper opening must be within 12" of the ceiling and the bottom edge of the lower opening must be within 12" of the floor (Figure 3).

- Each opening must have a free area of 1 square inch per 1000 BTU/hr input of all gas burning appliances in the boiler room. The minimum opening dimension is 3 inches. Minimum opening free area is 100 square inches per opening.
- If the total volume of both the boiler room and the room to which the openings connect is less than 50 cubic feet per 1000 BTU/hr of total appliance input, install a pair of identical openings into a third room. Connect additional rooms with openings until the total volume of all rooms is at least 50 cubic feet per 1000 BTU/hr of input.
- The "free area" of an opening takes into account the blocking effect of mesh, grills, and louvers. Where screens are used, they must be no finer than ¼" (4 x 4) mesh.
- If providing openings into adjacent rooms is undesirable, combustion and ventilation air can be brought into the boiler room from outdoors. See the instructions under "For Buildings of Unusually Tight Construction".

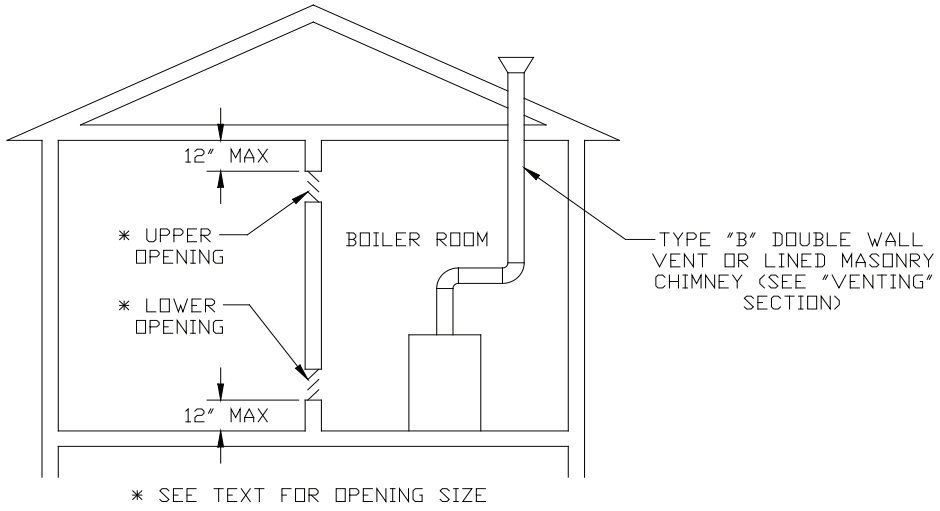

FIGURE 3: BOILER INSTALLED IN CONFINED SPACE,
ALL AIR FROM INSIDE

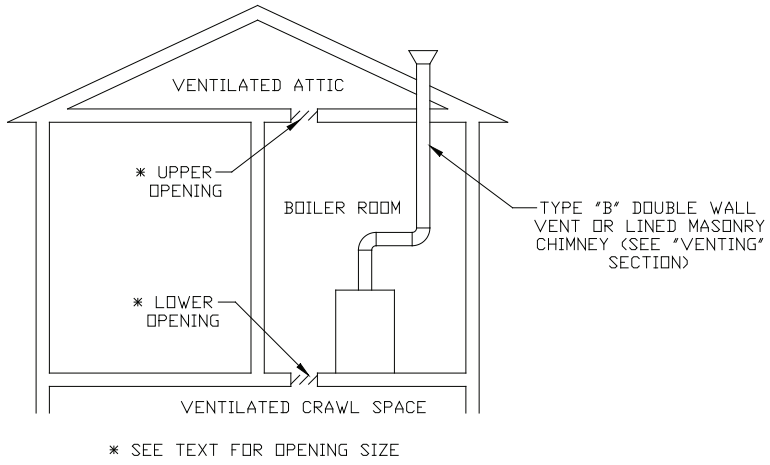

FIGURE 4: ALL AIR FROM OUTDOORS,
VENTILATED CRAWL SPACE AND ATTIC

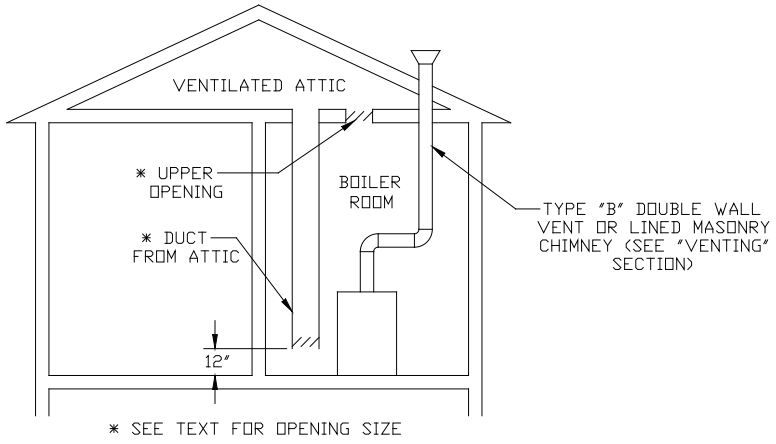

FIGURE 5: ALL AIR FROM OUTDOORS,
VIA VENTILATED ATTIC

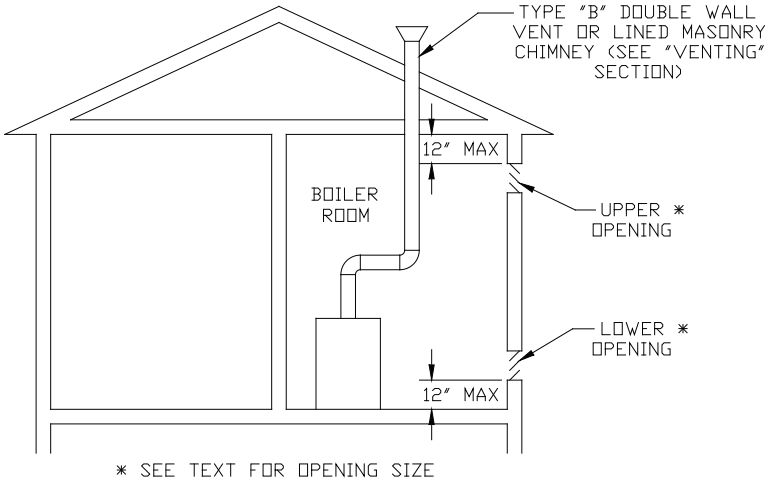

FIGURE 6: ALL AIR FROM OUTDOORS, USING OPENINGS INTO BOILER ROOM

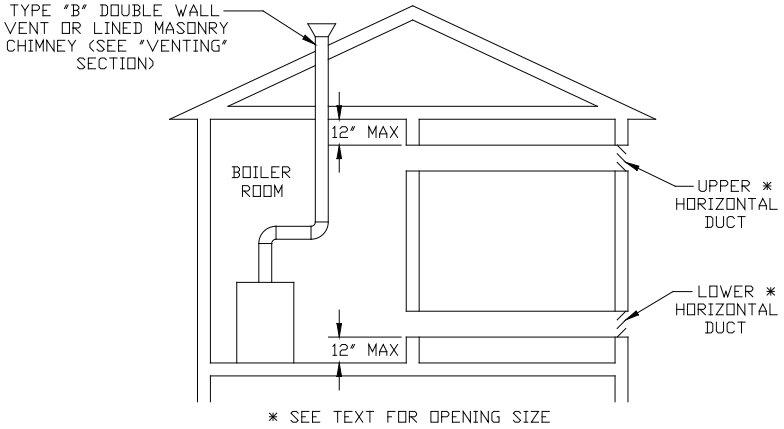

FIGURE 7: ALL AIR FROM OUTDOORS, USING HORIZONTAL DUCTS INTO BOILER ROOM

For Buildings of Unusually Tight Construction

1) Openings must be installed between the boiler room and the outdoors or a ventilated space, such as an attic or crawl space, which communicates directly with the outdoors.

2) Two openings are required. The top edge of the upper opening must be within 12 inches of the ceiling. The bottom edge of the lower opening must be within 12 inches of the floor.

3) Size openings and ducts as follows:

- Vertical ducts or openings directly outdoors (Figure 4, Figure 5, and Figure 6) - Each opening must have a free cross sectional area of 1 square inch per 4000 BTU/hr of the total input of all gas-fired appliances in the boiler room but not less than 100 square inches. Minimum opening size is 3 inches.
- Openings to outdoors via horizontal ducts (Figure 7) - Each opening must have a free cross sectional area of 1 square inch per 2000 BTU/hr of the total input of all gas fired appliances in the boiler room but not less than 100 square inches. Minimum opening size is 3 inches.
- The "free area" of an opening takes into account the blocking effect of mesh, grills, and louvers. Where screens are used, they must be no finer than ¼" (4 x 4) mesh.

VI Venting

WARNING

- IMPROPER VENTING MAY RESULT IN PROPERTY DAMAGE AND/OR THE RELEASE OF FLUE GASES, WHICH CONTAIN DEADLY CARBON MONOXIDE (CO), INTO THE HOME, WHICH CAN CAUSE SEVERE PERSONAL INJURY OR DEATH.
- DO NOT USE PLASTIC VENTING MATERIALS (SUCH AS CPVC, PVC AND RADEL) TO VENT THIS BOILER.
- INSPECT EXISTING CHIMNEY BEFORE INSTALLING BOILER. FAILURE TO CLEAN OR REPLACE DAMAGED PIPE OR TILE LINING WILL CAUSE SEVERE INJURY OR DEATH.

Vent installation must be in accordance with local building codes, or the local authority having jurisdiction, or the *National Fuel Gas Code*, NFPA 54/ANSI Z 223.1 latest edition.

A typical vent installation is illustrated by Figure 8. The components of vent installation are the vent damper (if used), vent connector and chimney.

1) Acceptable Chimneys - The following chimneys may be used to vent CGSA series boilers:

   - Listed Type B or L gas vent - Install in accordance with the manufacturer's instructions, the terms of its listing, and applicable codes.
   - Masonry Chimney - The masonry chimney must be constructed in accordance with the *Standard for Chimneys, Fireplaces, Vents, and Solid Fuel Burning Appliances* (NFPA 211) and lined with a clay liner or other listed lining system. Do not vent a CGSA series boiler into an unlined chimney.

2) Acceptable Vent Connectors - The following may be used for vent connectors:

   - Listed type B or L Gas Vent
   - Single Wall Galvanized Pipe - Use 0.018" (26 gauge or heavier). The size and location of the chimney may not permit the use of a single wall connector in some cases. See the *National Fuel Gas Code*. Do not use single wall pipe for vent connectors in attics.
   - Other Vent Connectors Permitted by the *National Fuel Gas Code*.

3) Chimney and Vent Connector Sizing - Size the chimney and vent connector in accordance with the *National Fuel Gas Code.*

4) Exterior Chimneys - An exterior chimney has one or more sides exposed to the outdoors below the roof line. There are two conditions under which an exterior chimney may be used:

- In some very restrictive cases, CGSA series boilers may be vented into an exterior ceramic lined masonry chimney. See the *National Fuel Gas Code* for information on when exterior chimneys may be used.
- An exterior masonry chimney may be used if it is lined with B vent or a listed chimney lining system.

5) This boiler may be vented using a listed power venter. The power venter must be sized and installed in accordance with the power venter manufacturer's instructions, the terms of the power venter listing, and applicable codes. The boiler must be electrically interlocked with the power venter to prevent boiler operation if the power venter fails to operate. Before deciding to use a power venter, make certain that the flue gas exiting the power venter will not damage adjacent construction or other structures. Also make certain that the power venter terminal will not be subjected to winds which could effect power venter operation.

6) Do not connect the vent of this appliance into any portion of a mechanical vent system operating under positive pressure.

7) Do not connect the boiler into a chimney flue serving an open fireplace or other solid fuel appliance.

8) Prior to boiler installation, inspect chimney for obstructions or other defects and correct as required. Clean chimney as necessary.

9) Vent pipe should slope upward from draft diverter not less than one inch in four feet. No portion of vent pipe should run downward or have sags. Vent pipe must be securely supported.

10) The vertical section of vent pipe coming off the boiler should be as tall as possible, while still maintaining the proper clearance from the horizontal vent connector to combustibles and the proper pitch called for in (9) above.

11) Vent pipe should be installed above the bottom of the chimney to prevent blockage.

12) Vent pipe must be inserted flush with inside face of the chimney liner and the space between vent pipe and chimney sealed tight.

13) Do not install the vent damper in any portion of the vent system which is used by appliances other than the boiler being installed.

14) Vent damper installation is mandatory on all sizes from the CGSA-57-S2 to CGSA-229-S2. The CGSA-240-S2 through CGSA-294-S2 are not supplied with a vent damper. If supplied, install vent damper (see Figure 9) as follows:

a) Open vent damper carton and remove installation instructions. Read the instructions thoroughly before proceeding. Verify that vent damper is same size as draft diverter outlet. See Figure 1. Unpack vent damper carefully. **Do not force closed damper blade.** Forcing vent damper closed may result in damaged gear train and void warranty.

b) Vent damper is factory shipped having approximately ¾" diameter hole in the vent damper blade, which **must be left open** for boilers equipped with standing pilot, and should be plugged on boilers with an intermittent pilot system, using the plug supplied with the damper.
Mount the vent damper on the flue collar without modification to either and secure with sheet metal screws. Make sure screws do not interfere with damper blade operation. Vent damper blade position indicator must be visible to users.

c) The damper wire harness is shipped wired into the boiler junction box. Plug the loose end of this harness into the damper and secure the flexible conduit to the damper using a connector nut provided.

d) Install vent connector pipe and vent fittings from vent damper outlet to chimney or gas vent. Secure with sheet metal screws and support as required.

Removing an Existing Boiler from a Common Chimney

In some cases, when an existing boiler is removed from a common chimney, the common venting system may be too large for the remaining appliances. At the time of removal of an existing boiler the following steps shall be followed with each appliance remaining connected to the common venting system placed in operation, while the other appliances remaining connected to the common venting system are not in operation.

a) Seal any unused opening in the common venting system.

b) Visually inspect the venting system for proper size and horizontal pitch and determine there is no blockage or restriction, leakage, corrosion and other deficiencies which could cause an unsafe condition.

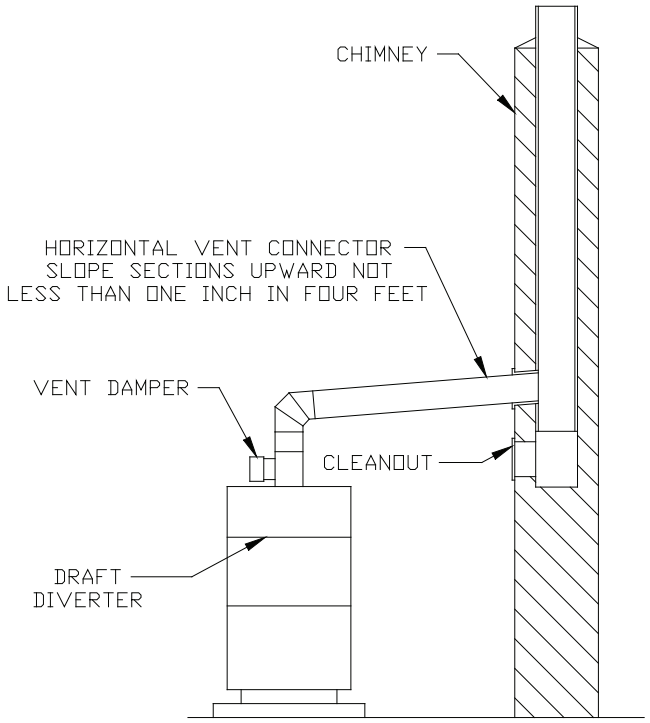

FIGURE 8: TYPICAL VENT SYSTEM INSTALLATION AND COMPONENTS

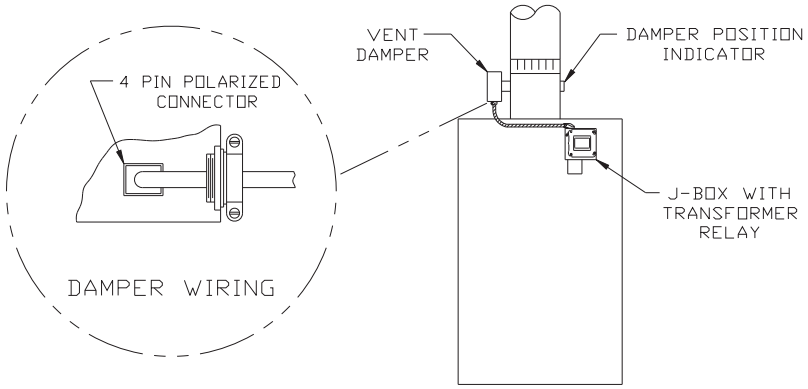

RIGHT SIDE VIEW

FIGURE 9: VENT DAMPER INSTALLATION DETAILS

c) Insofar as practical, close all building doors and windows and all doors between the space in which all the appliances remaining connected to the common venting system are located and other spaces of the building. Turn on clothes dryers and any appliance not connected to the common venting system. Turn on any exhaust fans, such as range hoods and bathroom exhausts, so they will operate at maximum speed. Do not operate a summer exhaust fan. Close fireplace dampers.

d) Place in operation the appliance being inspected. Follow the lighting instructions. Adjust thermostat so the appliance will operate continuously.

e) Test for spillage at the draft hood relief opening after five (5) minutes of main burner operation. Use the flame of a match or candle, or smoke from a cigarette, cigar, or pipe.

f) After it has been determined that each appliance remaining connected to the common venting system properly vents when tested as outlined above, return doors, windows, exhaust fans, fireplace dampers and any other gas-burning appliances to their previous condition of use.

g) Any improper operation of the common venting system should be corrected so the installation conforms with the National Fuel Gas Code, ANSI Z223.1. When resizing any portion of the common venting system, the common venting system should be resized to approach the minimum size as determined using the appropriate tables in the National Fuel Gas Code, ANSI Z223.1.

VII Gas Piping

WARNING

- SHUT OFF GAS SUPPLY BEFORE SERVICING THE BOILER.
- ALL GAS PIPING MUST BE GAS TIGHT. USE GAS RATED THREAD COMPOUND ON ALL THREADED JOINTS TO AVOID LEAKS, WHICH MAY RESULT IN FIRE OR EXPLOSION.
- SIZE GAS PIPING, REGULATORS, VALVES AND METERS SO AS TO PROVIDE AN ADEQUATE GAS FLOW AND PRESSURE TO THE BOILER DURING OPERATION. FAILURE TO DO SO MAY CAUSE POOR COMBUSTION, NOISE, INJURY OR DEATH.

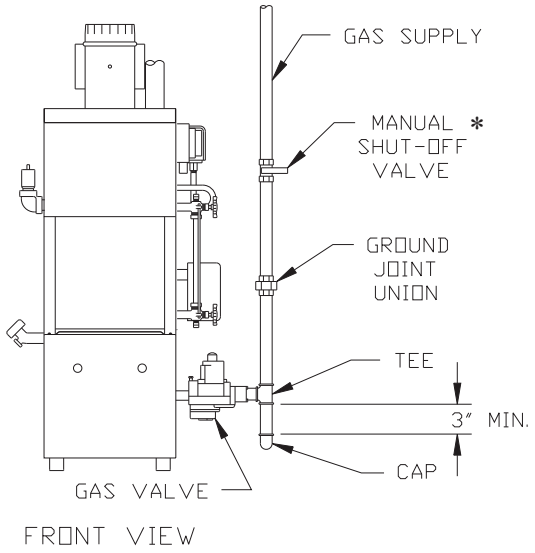

* State of Massachusetts Requires Manual Shut-off Valve to be "T" Handle Type

FIGURE 10: GAS CONNECTION TO BOILER

Gas piping to the boiler must be sized to deliver adequate gas for the boiler to fire at the nameplate input at a line pressure between the minimum and maximum values shown on the rating plate. For more information on gas line sizing, consult the utility or Chapter 2 of the *National Fuel Gas Code*.

Figure 10 shows typical gas piping connection to the CGSA boiler. A sediment trap must be installed upstream of all gas controls. Install a manual shut-off valve outside the jacket and ground joint union as shown.

The boiler and its gas connection must be leak tested before placing the boiler in operation. When doing this, the boiler and its individual shut-off must be disconnected from the rest of the system during any pressure testing of that system at pressures in excess of 1/2 psi. When pressure testing the gas system at pressures of 1/2 psi or less, isolate the boiler from the gas supply system by closing its individual manual shut-off valve.

VIII System Piping

WARNING

- INSTALL BOILER SO THAT THE GAS IGNITION SYSTEM COMPONENTS ARE PROTECTED FROM WATER (DRIPPING, SPRAYING, RAIN, ETC.) DURING APPLIANCE OPERATION AND SERVICE (CIRCULATOR REPLACEMENT, ETC.).
- OPERATION OF THIS BOILER IN A SYSTEM HAVING SIGNIFICANT AMOUNTS OF DISSOLVED OXYGEN CAN CAUSE SEVERE HEAT EXCHANGER CORROSION DAMAGE.
- PIPE SAFETY VALVE DISCHARGE TO A SAFE LOCATION. THE SAFETY VALVE MAY DISCHARGE SCALDING HOT WATER.
- DO NOT INSTALL A VALVE IN THE SAFETY VALVE DISCHARGE LINE.
- DO NOT MOVE SAFETY VALVE FROM FACTORY LOCATION.
- DO NOT PLUG SAFETY VALVE DISCHARGE. BLOCKING THE SAFETY VALVE MAY RESULT IN BOILER EXPLOSION.
- DO NOT INSTALL SAFETY VALVE WITH A SETTING GREATER THAN 15 PSI.

General Piping Notes

Figure 11 shows recommended near boiler piping for most common types of gravity return steam systems. Additional information on steam system design may be found in the *I=B=R* Guide RHH published by the Air-Conditioning, Heating and Refrigeration Institute (AHRI).

One of the primary purposes of this near boiler piping is to separate tiny water droplets from the steam exiting the boiler so that “dry” steam is sent to the system. If the near boiler piping is not correct, wet steam will enter the system and the following problems may occur:

- Short cycling on low water
- Boiler or system Flooding
- Hammering
- Failure to heat one or more radiators

Avoid the three common piping mistakes shown in Figure 12. This applies even if the existing boiler has one of the piping mistakes shown in Figure 12 and appears to be working. If two or more steam mains must be connected to the boiler, connect a separate take-off for each main into the header between the riser(s) and equalizer. Also note the following points:

1) A size reduction must be made to connect the header to the equalizer. This reduction must be made in the equalizer line. Do not make this size reduction in the horizontal header.

2) One pipe steam systems require air vents on each radiator, as well as at the end of each main. For the system to work properly, these vents must be properly installed, sized, and be in good condition. Inspect and replace any defective vents. If there are no vents at the ends of the mains, install them.

3) Do not attempt to manifold multiple CGSAs with gravity returns.

4) For installations with condensate or boiler feed pumps, follow the pump manufacturer's piping instructions. Such systems generally do not require Hartford loops.

5) Do not use a check valve in place of, or in addition to, a Hartford loop on a gravity return system.

6) Pipe the fill connection from a clean source of cold water. When the water supply is from a well, make sure that a strainer is installed in the well system.

7) Piping with a Chiller - If the boiler is used in conjunction with a chiller, pipe the boiler in parallel with chiller. Use isolation valves to prevent chilled water from entering the boiler.

Piping Installation

1) Remove parts bag from boiler crate.

2) Install safety valve (spindle must be in vertical position) into tapping on boiler left side (see Figure 1) using the 3/4" NPT nipples and elbow supplied.

3) Pipe the discharge of the safety relief valve to a location where water or steam will not create a hazard or cause property damage if the valve opens. The end of the discharge pipe must terminate in an unthreaded pipe. If the safety valve discharge is not piped to a drain it must terminate at least 6 inches above the floor. The termination of the safety valve discharge piping must be in an area where it is not likely to become plugged by debris or subjected to freezing.

4) Install drain valve into tapping on boiler left side using the 2 x 3/4 bushing provided (see Figure 1).

5) Connect system supply and return to boiler. See Figure 11. The CGSA-57-S2 - CGSA-142-S2 require only one supply riser. Two supply risers are required on the CGSA-171-S2 and larger sizes.

6) Piping with a Chiller - If the boiler is used in conjunction with a chiller, pipe the boiler in parallel with chiller. Use isolation valves to prevent chilled water from entering the boiler.

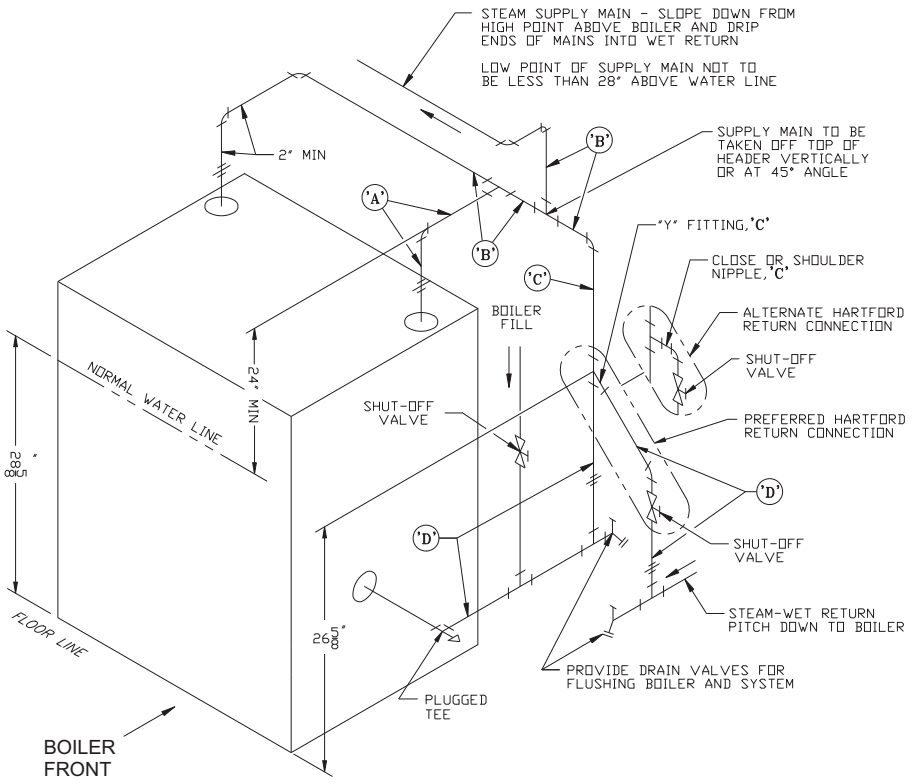

BOILER MODEL	MINIMUM PIPE DIA. (IN NPT)			
	"A"	"B"	"C"	"D"
CGSA-57	*	2	1 1/2	1 1/4
CGSA-85	*	2	1 1/2	1 1/4
CGSA-113	*	2	1 1/2	1 1/4
CGSA-142	*	2	1 1/2	1 1/4
CGSA-171	2	3	1 1/2	1 1/4
CGSA-199	2	3	2	1 1/2
CGSA-229	2	3	2	1 1/2
CGSA-240	2	3	2	1 1/2
CGSA-267	2	3	2	1 1/2
CGSA-294	2	3	2	1 1/2

* SECOND 2" SUPPLY RISER OPTIONAL

FIGURE 11: STEAM BOILER PIPING FOR GRAVITY RETURN

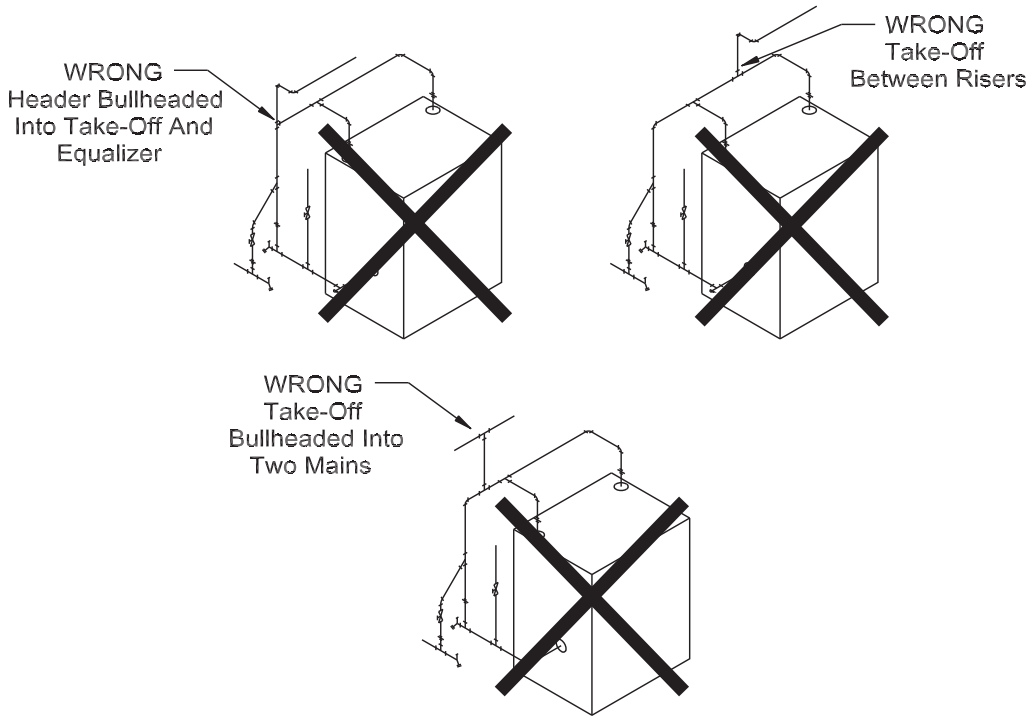

FIGURE 12: COMMON NEAR-BOILER PIPING MISTAKES

IX Indirect Water Heater Piping

All CGSA series boilers are equipped with tappings to permit the connection of a indirect water heater. In this type of system, hot boiler water is drawn from below the water line and passed through the heat exchanger in the indirect water heater. This section describes boiler-side piping only. Refer to the indirect water heater instruction manual for domestic water piping. The components in this system and their functions are as follows:

1) Circulator - Mount the circulator as shown in Figure 13. The circulator should be located as low and as close to the boiler as practical. Do not install valves, or other devices having a significant pressure drop, between the boiler and the circulator inlet. All piping between the boiler and the circulator inlet should be 1", regardless of the size of the piping required in the rest of the system. See Figure 14 in Part X for wiring information.

2) "Y" Strainer - Install a "Y" strainer to prevent sediment from accumulating inside the indirect water heater.

3) Check Valve - Prevents gravity circulation through the indirect water heater when the boiler is responding to a call for heat.

4) Boiler Limit Control - Use a SPST break-on-rise temperature limit control such as the Honeywell L4006A. Do not set the limit above 180F as doing so may cause the boiler to steam when there is no call for heat. See Figure 14 for wiring information.

5) Valves and Unions - Install shut-off valves, drain valves, and unions in locations that will facilitate maintenance of the system. Do not install any valves between the boiler and circulator inlet.

NOTICE

- SOME INDIRECT WATER HEATERS MAY NOT BE SUITABLE FOR USE WITH A STEAM BOILER. CONSULT THE WATER HEATER MANUFACTURER'S GUIDELINES BEFORE INSTALLING IT IN THIS TYPE OF SYSTEM.
- BOILER WATER TEMPERATURES AND FLOW RATES IN THIS TYPE OF SYSTEM MAY BE CONSIDERABLY LOWER THAN THOSE UPON WHICH THE WATER HEATER MANUFACTURER'S RATINGS ARE BASED. THIS MAY RESULT IN SUBSTANTIALLY LONGER WATER HEATER RECOVERY TIMES.

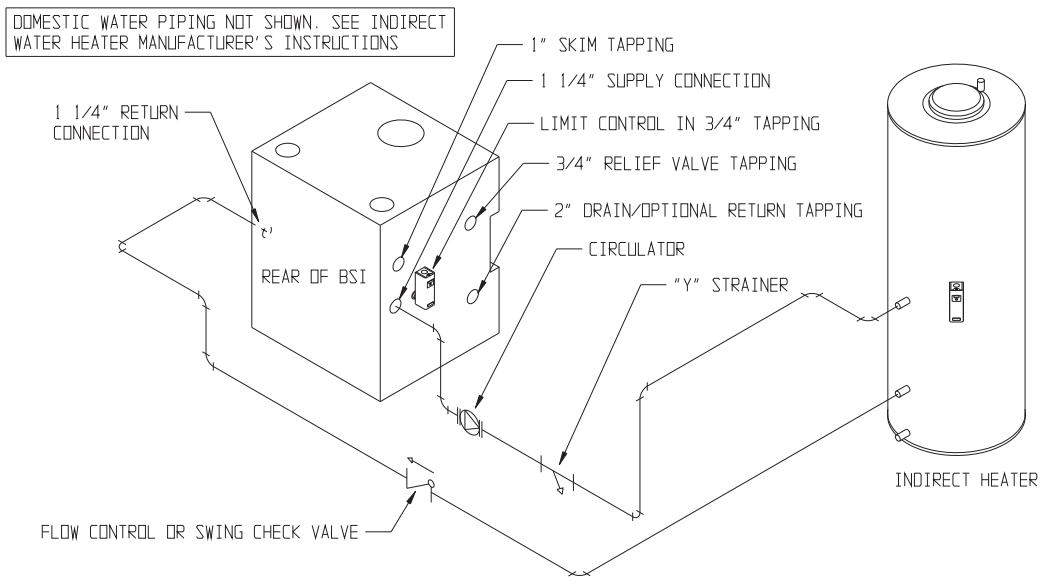

FIGURE 13: INDIRECT WATER HEATER BOILER-SIDE PIPING

X Wiring

WARNING

- ALL WIRING AND GROUNDING MUST BE DONE IN ACCORDANCE WITH THE AUTHORITY HAVING JURISDICTION OR, IN THE ABSENCE OF SUCH REQUIREMENTS, WITH THE *NATIONAL ELECTRICAL CODE (ANSI/NFPA 70).*
- DISCONNECT ELECTRICAL POWER TO THE BOILER AND HEATING SYSTEM BEFORE SERVICING. POSITIVELY ASSURE THAT NO VOLTAGE IS PRESENT. LOCK ELECTRICAL BOXES TO PREVENT SOMEONE FROM INADVERTENTLY RESTORING POWER BEFORE THE HEATING SYSTEM IS SAFE TO OPERATE.
- NEVER DEFEAT OR JUMP OUT SAFETY DEVICES.
- PROTECT EACH BOILER CIRCUIT WITH A PROPERLY SIZED OVER-CURRENT PROTECTION DEVICE.
- MAKE ELECTRICAL CONNECTIONS CAREFULLY ACCORDING TO THE BOILER'S WIRING DIAGRAM AND INSTRUCTIONS.
- WIRE ADDITIONAL FIELD SUPPLIED SAFETY LIMITS, SUCH AS LOW WATER CUTOFFS, IN SERIES WITH THE 120V CIRCUIT USED TO POWER THE BOILER. DO NOT ALTER THE BOILER'S FACTORY WIRING WHEN ADDING AN ADDITIONAL LIMIT DEVICE.

1) 120 Volt Wiring - The boiler should be provided with its own 15A branch circuit with fused disconnect. All 120 volt connections are made inside the junction box on the left side of the boiler. Remove the transformer to gain access to this box (also see Figure 15):

   - Hot ("black") - Wire nut to black transformer lead
   - Neutral ("white") - Wire nut to white transformer lead
   - Ground ("green" or bare) - Ground screw inside junction box.

2) Thermostat Wiring - Follow thermostat manufacturer instructions. To insure proper thermostat operation, avoid installation in areas of poor air circulation, hot spots (near any heat source or in direct sunlight), cold spots (outside walls, walls adjacent to unheated areas, locations subject to drafts). Provide Class II circuit between thermostat and boiler. Connect thermostat wire leads to the blue transformer lead and brown relay lead inside the junction box. Set the heat anticipator to 0.2A.

Feeder Wiring for Boilers Equipped with Hydrolevel CG400A Low Water Cut-offs

CAUTION

DO NOT ATTEMPT TO CONNECT A MCDONNELL & MILLER MODEL #101A FEEDER, OR OTHER FEEDER WITHOUT A DELAY, TO A BOILER EQUIPPED WITH A HYDRO-LEVEL CG400 LOW WATER CUTOFF. DOING SO COULD DESTROY THE BOILER TRANSFORMER AND/OR FLOOD THE SYSTEM.

1) Using Hydrolevel VXT-24 **TWO-WIRE** feeder - Do not alter factory boiler wiring. Connect VXT-24 to CG400A as follows:
   - Connect the **BLACK** lead on the feeder to terminal **A** on the LWCO
   - Connect the **WHITE** lead on the feeder to terminal **2** on the LWCO

2) Using Hydrolevel VXT-24 **THREE-WIRE** feeder - Do not alter factory boiler wiring. Connect VXT-24 to CG400A as follows:
   - Connect the **BLACK** lead on the feeder to terminal **1** on the LWCO
   - Connect the **WHITE** lead on the feeder to terminal **2** on the LWCO
   - Connect the **RED** lead on the feeder to terminal **A** on the LWCO

3) Using McDonnell & Miller WF2-U-24 feeder - Do not alter factory boiler wiring. Connect WF2-U-24 to CG400A as follows:
   - Connect terminal **W** on the feeder to terminal **A** on the LWCO
   - Connect terminal **N** on the feeder to terminal **2** on the LWCO
   - Connect terminal **H** on the feeder to terminal **1** on the LWCO

Indirect Water Heater Wiring

Figure 14 shows field wiring for an indirect water heater. A Honeywell R845A or equivalent DPST relay and transformer is required. The high limit described in Part IX must also be supplied by the installer. A call for heat from the indirect water heater thermostat will energize the relay making both sets of contacts. One set of these contacts then energizes the circulator. The other set of contacts will make the “T” and “T” contacts on the burner primary control, firing the burner. If the boiler water temperature exceeds the high limit setting of 180F, the high limit will open the “T” - “T” circuit and the burner will shut down.

If there is a call for space heat, the heating thermostat will make the “T”-”T” circuit and the boiler will fire without regard to the status of the indirect water heater. The low water cut-off and pressure limit control will interrupt 120 volt power to the burner in the event of a low water or excessive pressure condition.

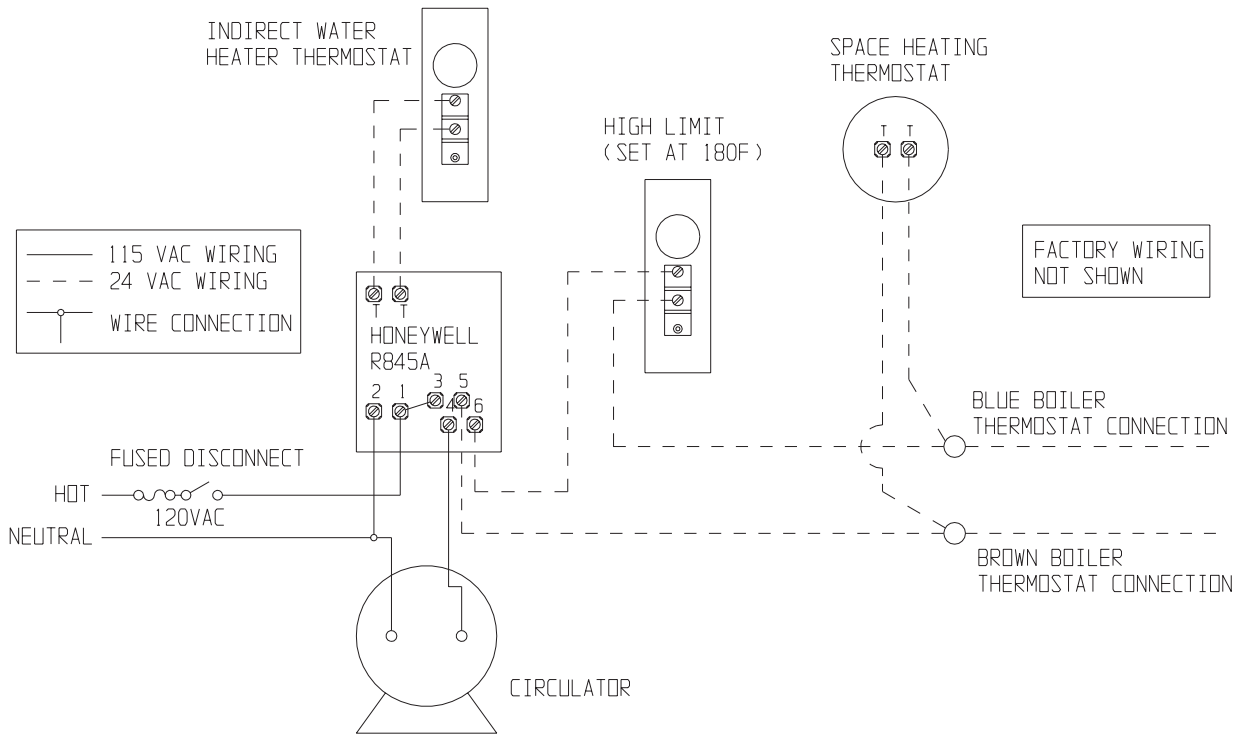

FIGURE 14: WIRING INDIRECT WATER HEATER TO BOILER

CGSA Control System – Sequence of Operation

(Refer to Figure 15 for ladder and connection diagrams)

Sequence of Operation, Intermittent Ignition

1) When the boiler is energized, 24 volts is immediately applied to terminals "1" (blue) and "4" (yellow) on the vent damper. Assuming that there is no call for heat, and that the damper switch is in the "automatic" position, the damper will close. On boilers equipped with Hydrolevel CG400A probe type low water cut-offs, voltage is also always applied to terminals "1" (blue) and "2" (yellow) on the low water cut-off to power the water level sensing circuit.
2) Assuming that water is above the cut-off level, power will appear at terminal "3" on the CG400 LWCO.
3) Assuming that steam pressure is below the pressure limit setting, power will appear on one side of relay contact 1R1 (Gray lead). Relay 1R is the R8225 mounted under the junction box.
4) A call for heat from the thermostat energizes relay coil 1R causing contacts 1R1 to make. Current then flows through contacts 1R1 to pin terminal "2" (orange) at the vent damper and the damper opens.
5) Once the vent damper is fully open, an end switch inside the damper will make, energizing pin "3" (red) at the damper.
6) Current passes from terminal "3" on the vent damper though the flame rollout and blocked vent ("spill") switches. Under normal conditions, both of these switches are made and voltage will therefore immediately appear across terminals "24V" and "24V (GND)" on the ignition module.
7) Upon application of voltage across the "24V" and "24V (GND)" terminals, the ignition module will start an ignition spark at the pilot and apply 24 volts across the pilot valve (terminals "PV" and "MV/PV").
8) Once the pilot is established, the pilot flame will act as a diode, converting the AC current at the electrode to a half wave DC current at the pilot's ground strap. This DC current flows through the boiler to the "GND (BURNER)" connection on the ignition module. For the ignition module to recognize that a pilot flame is present, the DC current flowing into this terminal must be in excess of approximately 1.0 uA.
9) Once the ignition module detects the presence of a pilot flame, voltage is applied across the main valve (terminals "MV" and "MV/PV"), opening the valve and establishing main flame.
10) The way in which the ignition module handles failure to establish pilot or the loss of an already established pilot depends upon the exact ignition module supplied with the boiler. For more information on module operation, consult the ignition module instructions supplied with the boiler or the local National representative.

Safety Control Operation - Intermittent Ignition

Hydrolevel CG400A Low Water Cut-off - Interrupts burner operation if the water in the boiler drops below a safe level. As the water drops past the cut-off point, the amber lamp on the CG400 will glow. The CG400 will interrupt power to the burners 15 seconds after the water level drops past the cut-off point. This feature prevents short cycling of the burners due to a bouncing water line. The burners will then remain off until 30 seconds after the water level has been raised above the cut-off point.

The CG400 is also equipped with a feature which will shut down the burners after they have been firing for 20 minutes, regardless of the water level status. The CG400 then keeps the burners off for 90 seconds, allowing the water level and any foam which is present to settle. During this 90 second interval, the green LED on the CG400 will glow. If the water level is still above the cut-off line at the end of this 90 second interval, the CG400 will restart the burners.

The vent damper will close when the low water cut-off interrupts burner operation.

Pressure Limit Control - Interrupts burner operation when the pressure in the boiler exceeds the "Main" setting. Burner operation is restored when the pressure in the boiler drops to the "Main" pressure less the differential pressure.

The vent damper will close when the pressure limit control interrupts burner operation.

Blocked Vent ("Spill") Switch - Automatically interrupts burner operation in the event that flue gas spills from the draft diverter opening. This switch is equipped with a reset button which must be pressed to restore normal burner operation. An open blocked vent switch is indicative of a problem with the vent system. If the blocked vent switch opens, the cause of the venting problem must be found and corrected by a qualified gas service technician before the blocked vent switch is reset.

Flame Roll-out Switch - Automatically interrupts burner operation when flames or excessive heat are present in vestibule. The flame roll-out switch is a single use device which must be replaced by an identical switch in order to restore normal operation. An open flame roll-out switch is usually indicative of a plugged heat exchanger. The cause of the flame roll-out must be found and corrected by a qualified gas service technician, and the switch replaced with an identical one, before the boiler is returned to operation.

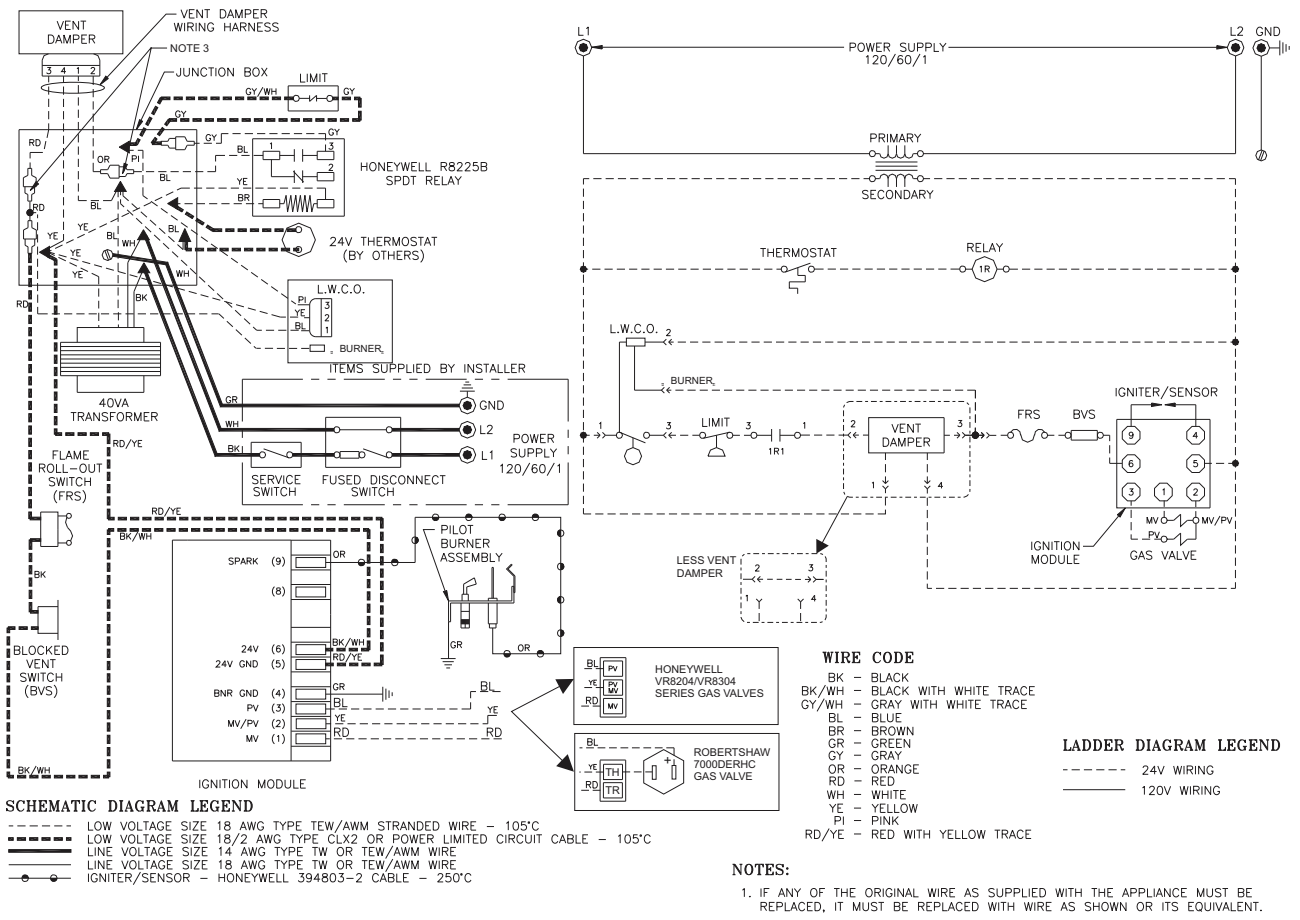

FIGURE 15: WIRING DIAGRAM, INTERMITTENT IGNITION AND HYDROLEVEL CG-400A LOW WATER CUTOFF

XI Start-up and Checkout

WARNING

DO NOT LEAVE THE BOILER IN SERVICE IF IT FAILS ANY OF THE FOLLOWING START-UP CHECKS. DOING SO MAY RESULT IN FIRE, EXPLOSION, OR CARBON MONOXOIDE (CO) POISONING.

WARNING

- GAS LEAKS MAY RESULT IN FIRE OR EXPLOSION.
- NEVER USE A FLAME TO CHECK FOR GAS LEAKS.
- MAKE SURE THAT THE AREA AROUND THE BOILER IS CLEAR AND FREE FROM COMBUSTIBLE MATERIALS, GASOLINE AND OTHER FLAMMABLE VAPORS AND LIQUIDS.
- WATER LEAKS MAY CAUSE EXTENSIVE PROPERTY DAMAGE.
- DAMPER MUST BE IN OPEN POSITION WHEN MAIN BURNERS ARE ON.

NOTICE

SAFE LIGHTING AND OTHER PERFORMANCE CRITERIA WERE MET WITH THE GAS MANIFOLD AND CONTROL ASSEMBLY PROVIDED ON THE BOILER WHEN THE BOILER UNDERWENT THE TESTS SPECIFIED IN ANSI Z21.13.

Use the following procedure for initial start-up of the boiler:

1) Make sure that the boiler is filled with water to the normal water line (28 3/4 inches above the floor or pad on which the boiler is installed).
2) Check all new gas piping for leaks and purge piping sections that are filled with air. See Part 4 of the *National Fuel Gas Code* for additional information on testing and purging gas lines.
3) Verify that vent system is complete and free of obstructions before attempting to fire boiler.
4) Inspect all wiring for loose or uninsulated connections.
5) Make sure the main burners are seated properly in the rear of burner tray and on orifices.
6) Adjust steam pressure limit control for a cut-in pressure of 0.5 psi and a differential pressure of 1 psi.
7) Adjust thermostat to the highest setting.
8) Start the boiler using the appropriate lighting instructions for the gas valve on the boiler on pages 24 - 25.
9) Upon initial start-up, the gas train will be filled with air. Even if the gas line has been completely purged of air, it may take several tries for ignition before a flame is established. Once a flame has been established for the first time, subsequent calls for burner operation should result in a flame on the first try.
10) Observe pilot burner flame. Pilot burner produces three flames. The center one should be a steady medium blue flame covering around 3/8" to ½" of spark electrode/flame rod.
12) Make sure vent damper is in open position when main burners are firing.
13) Inspect the main burner flames visible through the observation port in burner access panel. The flame should be stable and mostly blue (see Figure 17). No yellow tipping should be present; however, intermittent flecks of yellow and orange in the flame are normal.

14) Check entire gas train for leaks using soap and water or other approved leak detection method while boiler is firing. Fix any leaks found immediately.

15) Run gas valve safety shutdown test. With main burners firing, disconnect ignition cable from ignition module. Both pilot burner and main burners should stop firing.

16) Check the manifold pressure and adjust if necessary. To do this, use the following procedure:

a) Connect a manometer to the inlet pressure tap on the gas valve (see Figure 18).

b) Check the inlet pressure with all gas appliances on and off. The inlet pressure at the boiler must be within the following limits regardless of what combination of appliances is firing:

Inlet Press (inches w.c.)	Natural Gas	LP Gas
Min.	5.0	11.0
Max.	14.0	13.0

If the inlet pressure falls outside of these limits, find and correct the cause of the problem before proceeding further.

c) Connect a manometer to the manifold (outlet) pressure tap on the gas valve (see Figures 23 and 24).

d) Read the manifold pressure. It should be set at:

	Natural Gas	LP Gas
Manifold Press. (inches w.c.)	3.5	10.0

e) If a manifold pressure adjustment is needed, make the adjustment by turning the pressure regulator (see Figures 23 and 24) screw clockwise to raise the pressure and counter clockwise to reduce the pressure. If a manifold pressure adjustment is made, recheck the line pressure to be certain that it is still within acceptable limits. Replace the cover screw on the regulator.

17) Test thermostat operation while the boiler is running. Turn the thermostat to the lowest setting. Both pilot burner and main burners should stop firing. Raise the thermostat back to the highest setting. The pilot burner and main burners should relight.

18) Verify low water cutoff operation while the boiler is running. Slowly open drain valve and drain boiler until the water level drops below low water cutoff line. Water still should be visible in the gauge glass when the low water cutoff shuts down the main burners. Both pilot burner and main burners should stop firing. Make sure pressure limit, thermostat or other controls have not shut off the boiler. Upon test completion refill the boiler to the normal water level.

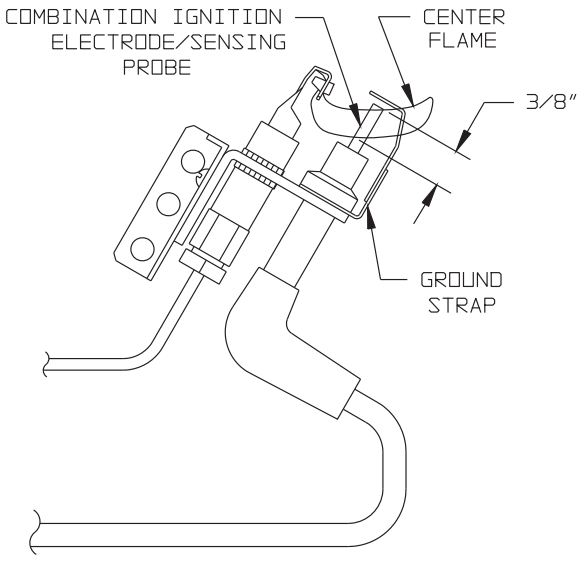

FIGURE 16: INTERMITTENT IGNITION
PILOT BURNER FLAME

LIGHTING INSTRUCTIONS FOR BOILERS EQUIPPED WITH HONEYWELL VR8204 AND VR8304 SERIES GAS VALVES

FOR YOUR SAFETY READ BEFORE LIGHTING

WARNING: If you do not follow these instructions exactly, a fire or explosion may result causing property damage, personal injury or loss of life.

A. This appliance is equipped with an ignition device which automatically lights the pilot. Do not try to light the pilot by hand.

B. BEFORE LIGHTING smell all around the appliance area for gas. Be sure to smell next to the floor because some gas is heavier than air and will settle on the floor.

WHAT TO DO IF YOU SMELL GAS

- **Do not try to light any appliance.**
- **Do not touch any electric switch; do not use any phone in your building.**
- **Immediately call your gas supplier from a neighbor's phone. Follow the gas supplier's instructions.**
- **If you cannot reach your gas supplier, call the fire department.**

C. Use only your hand to push in or turn the gas control knob. Never use tools. If the knob will not push in or turn by hand, don't try to repair it, call a qualified service technician. Force or attempted repair may result in a fire or explosion.

D. Do not use this appliance if any part has been under water. Immediately call a qualified service technician to inspect the appliance and to replace any part of the control system and any gas control which has been under water.

OPERATING INSTRUCTIONS

1. **STOP! Read the safety information above on this label.**
2. **Set the thermostat to lowest setting.**
3. **Turn off all electric power to the appliance.**
4. **This appliance is equipped with an ignition device which automatically lights the pilot. Do not try to light the pilot by hand.**

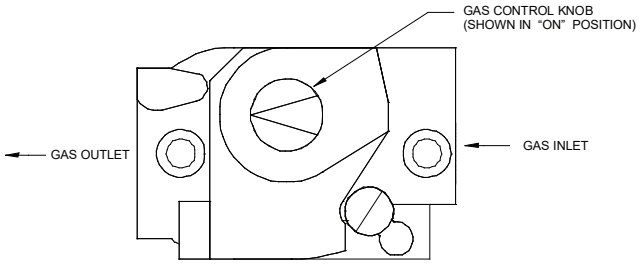

GAS VALVE - TOP VIEW

5. **Remove front access panel.**
6. **Rotate the gas control knob clockwise ↷ to OFF.**
7. **Wait five (5) minutes to clear out any gas. Then smell for gas, including near the floor. If you then smell gas, STOP! Follow "B" in the safety information above on this label. If you don't smell gas go to the next step.**
8. **Rotate the gas control knob counter clockwise ↶ to "ON".**
9. **Replace front access panel.**
10. **Turn on all electric power to the appliance.**
11. **Set thermostat to desired setting.**
12. **If the appliance will not operate, follow the instructions "To Turn Off Gas To Appliance" and call your service technician or gas supplier.**

TO TURN OFF GAS TO APPLIANCE

1. **Set the thermostat to lowest setting.**
2. **Turn off all electric power to the appliance if service is to be performed.**
3. **Push in gas control knob slightly and turn clockwise ↷ to "OFF". Do not Force.**

LIGHTING INSTRUCTIONS FOR BOILERS EQUIPPED WITH ROBERTSHAW 7000DERHC SERIES GAS VALVES

FOR YOUR SAFETY READ BEFORE LIGHTING

WARNING: If you do not follow these instructions exactly, a fire or explosion may result causing property damage, personal injury or loss of life.

A. This appliance is equipped with an ignition device which automatically lights the pilot. Do not try to light the pilot by hand.

B. BEFORE LIGHTING smell all around the appliance area for gas. Be sure to smell next to the floor because some gas is heavier than air and will settle on the floor.

WHAT TO DO IF YOU SMELL GAS

- **Do not try to light any appliance.**
- **Do not touch any electric switch; do not use any phone in your building.**
- **Immediately call your gas supplier from a neighbor's phone. Follow the gas supplier's instructions.**
- **If you cannot reach your gas supplier, call the fire department.**

C. Use only your hand to push in or turn the gas control knob. Never use tools. If the knob will not push in or turn by hand, don't try to repair it, call a qualified service technician. Force or attempted repair may result in a fire or explosion.

D. Do not use this appliance if any part has been under water. Immediately call a qualified service technician to inspect the appliance and to replace any part of the control system and any gas control which has been under water.

OPERATING INSTRUCTIONS

1. **STOP! Read the safety information above on this label.**
2. **Set the thermostat to lowest setting.**
3. **Turn off all electric power to the appliance.**
4. **This appliance is equipped with an ignition device which automatically lights the pilot. Do not try to light the pilot by hand.**

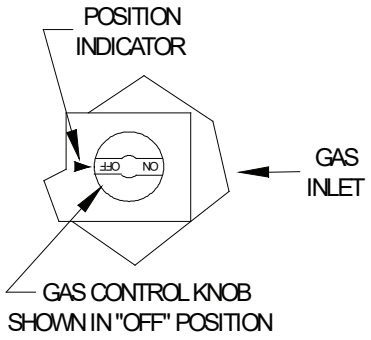

5. **Remove front access panel.**
6. **Rotate the gas control knob clockwise ↘ to OFF.**
7. **Wait five (5) minutes to clear out any gas. Then smell for gas, including near the floor. If you then smell gas, STOP! Follow "B" in the safety information above on this label. If you don't smell gas go to the next step.**
8. **Rotate the gas control knob counter clockwise ↙ to "ON".**
9. **Replace front access panel.**
10. **Turn on all electric power to the appliance.**
11. **Set thermostat to desired setting.**
12. **If the appliance will not operate, follow the instructions "To Turn Off Gas To Appliance" and call your service technician or gas supplier.**

TO TURN OFF GAS TO APPLIANCE

1. **Set the thermostat to lowest setting.**
2. **Turn off all electric power to the appliance if service is to be performed.**
3. **Push in gas control knob slightly and turn clockwise ↘ to "OFF". Do not Force.**

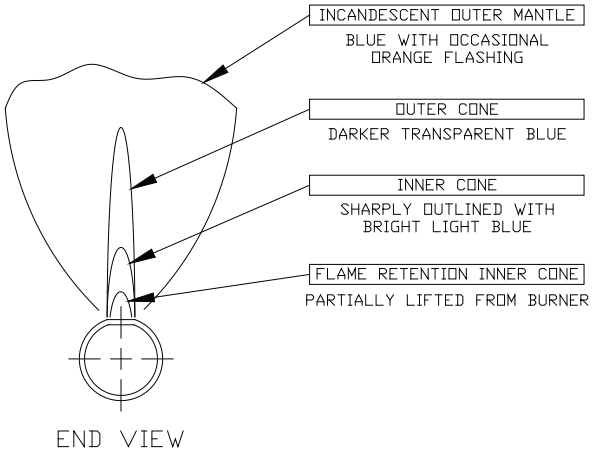

FIGURE 17: MAIN BURNER FLAME - 1" BURNERS

19) Check pressure limit control operation. When steam pressure is registered on pressure gauge, lower pressure limit setting below gauge reading. Both pilot burner and main burners should stop firing. Raise pressure limit setting above gauge reading. The pilot burner and main burners should relight.

20) After the boiler has operated for approximately 30 minutes, check the boiler and heating system piping for leaks. Repair any leaks found at once.

21) Inspect the vent system for flue gas leaks. Repair any leaks found before leaving the boiler in operation.

22) After new boiler has been installed and put into continuous operation for several days, clean the boiler of oil, grease, sludge, and other contaminants that may have been present in existing piping. This will prevent unsteady water line and water carry over into supply main. The boiler boil-out should be done as follows:

a) Turn off gas supply to boiler per the appropriate Lighting and Operating instructions on page 24 - 25.

b) Drain water from boiler until about one inch of water is visible in gauge glass.

c) Run a hose or temporary piping from the boiler drain valve to a location where hot water can be safely discharged. Drain approximately five gallons of water from the boiler and mix-in an appropriate amount of an approved boil-out compound. Remove safety valve and refill the boiler with prepared solution through funnel inserted into elbow under the safety valve. Run a hose or temporary piping from safety valve tapping to a location where hot water can be safely discharged. **DO NOT INSTALL ANY VALVES IN THIS LINE**.

d) Light off the boiler per the appropriate instructions on page 24 - 25. Run boiler for several hours, boiling the water, without generating steam pressure. Open the water feed valve sufficiently to allow a slight overflow of water through the safety valve tapping drain line. Continue boiling until water coming out is clear.

e) Turn off gas supply to boiler per the appropriate Lighting and Operating instructions on pages 24 - 25. Drain hot water from boiler through boiler drain valve to a location where hot water can be safely discharged. Refill the boiler to normal water line level. If water in the gauge glass does not look clear, repeat above boil-out procedure again until water is clears.

f) Reinstall safety valve and related piping.

g) Conduct pH and Alkalinity test of water in the system. The pH reading should be in 7 to 11 range.

NOTICE

WHEN SUBSTANTIAL AMOUNT OF MAKE-UP WATER IS USED DUE TO LOST CONDENSATE, OR WHEN MAKE-UP WATER IS HARD OR CORROSIVE, WATER TREATMENT IS REQUIRED. CONTACT QUALIFIED WATER TREATMENT COMPANY FOR RECOMMENDED WATER TREATMENT COMPOUNDS AND PROCEDURES.

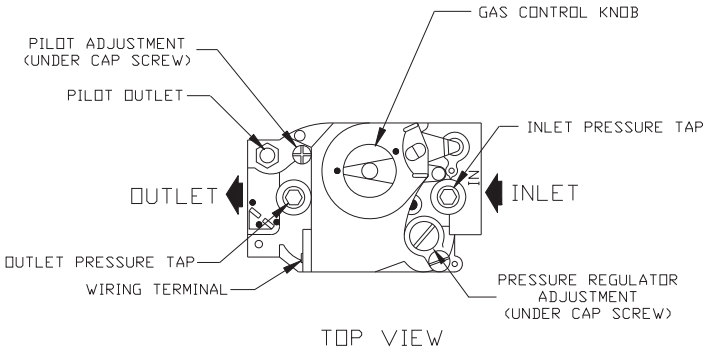

FIGURE 18a: GAS VALVE DETAIL - HONEYWELL VR8204 AND VR8304

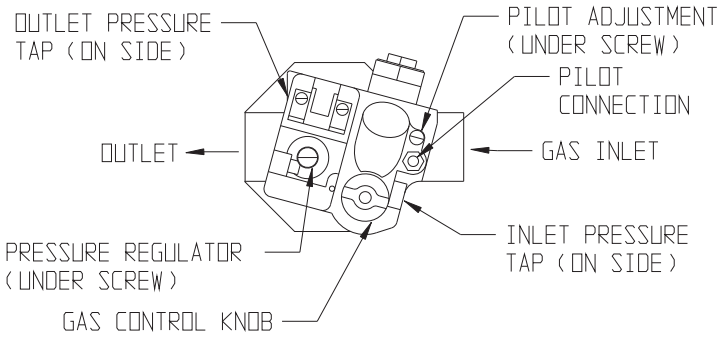

FIGURE 18b: GAS VALVE DETAIL - ROBERTSHAW 7000DERHC

XII Service and Maintenance

WARNING

- THE BOILER CONTAINS REFRACTORY CERAMIC FIBER, A POSSIBLE HUMAN CARCINOGEN. USE A NIOSH APPROVED RESPIRATOR WHEN SERVICING HIGH-TEMPERATURE INSULATION AND GASKET MATERIALS. WASH EXPOSED SKIN GENTLY WITH SOAP AND WATER AFTER CONTACT. WASH EXPOSED CLOTHING SEPARATE FROM NORMAL LAUNDRY.
- LABEL ALL WIRES PRIOR TO DISCONNECTION WHEN SERVICING CONTROLS. WIRING ERRORS CAN CAUSE IMPROPER AND DANGEROUS OPERATION. VERIFY PROPER OPERATION AFTER SERVICING.
- FAILURE TO MAINTAIN THE BOILER IN PROPER WORKING CONDITION MAY LEAD TO FIRE, EXPLOSION, PERSONAL INJURY OR DEATH AND EXTENSIVE PROPERTY DAMAGE.
- TURN OFF ALL GAS AND ELECTRIC POWER SUPPLIES TO THE BOILER BEFORE SERVICING. CONTACT WITH OR RELEASE OF DANGEROUS FLAMMABLE GAS, ELECTRICAL VOLTAGE, MOVING PARTS AND VERY HOT WATER UNDER PRESSURE MAY CAUSE SERIOUS PERSONAL INJURY, PROPERTY DAMAGE OR DEATH.
- LOCK ELECTRICAL BOXES AND GAS VALVES CLOSED TO PREVENT SOMEONE FROM INADVERTENTLY RESTORING POWER OR GAS BEFORE THE HEATING SYSTEM IS SAFE TO OPERATE.
- STEAM OR WATER LEAKS CAN CAUSE SEVERE CORROSION DAMAGE TO THE BOILER OR OTHER SYSTEM COMPONENTS. REPAIR ANY LEAKS FOUND IMMEDIATELY.

On a continuous basis:

1) Keep the area around the boiler free and clear from combustible materials, gasoline, and other flammable vapors and liquids.
2) Keep the area around the boiler and boiler room ventilation openings clear of objects which might obstruct the flow of combustion and ventilation air.

On an annual basis:

1) Turn off electrical power and gas supply to the boiler
2) Inspect the flue passages for signs of blockage. If there is any carbon in the combustion chamber or the flue passages, clean the heat exchanger before proceeding further. See the cleaning procedure below.
3) Remove any debris found in the combustion chamber, being careful not to disturb combustion chamber insulation.
4) Remove all burners, noting the location of the pilot main burner. If burners show signs of deterioration, they should be replaced (some discoloration around the burner ports is normal). Clean the burners by first brushing the ports with a soft bristle brush and then vacuuming out any debris through the venturi opening.
5) Inspect the pilot assembly. Clean any deposits found on the electrode and grounding strap. The ideal gap between the electrode and the ground strap is 1/8”. Inspect the porcelain for cracks or other deterioration. Replace pilot assembly if deterioration is found.
6) Inspect the combustion chamber insulation for deterioration.
7) Inspect the ignition cable insulation for cracks or other deterioration. If deterioration is found, replace cable.
8) Reinstall burners, being careful to put the pilot burner back in its original location.
9) Inspect all boiler wiring for loose connections or deterioration.

10) Inspect the vent system:

- Make sure that the vent system is free of obstructions.
- Make sure that all vent system supports are intact.
- Inspect joints for signs of condensate or flue gas leakage.
- Inspect venting components for corrosion or other deterioration. Replace any defective vent components.

11) Inspect the boiler and system for leaks.
12) Inspect the low water cut-off:

- For Hydrolevel CG400A low water cut-offs - Remove and inspect the probe for scale and sediment buildup. Clean any sediment or scale from the probe with a scouring pad or steel wool. Consult the Hydrolevel CG400 manual for any additional maintenance information. Test the low water cut-off before placing the boiler back into service.

13) Allow the boiler to cool to room temperature. Remove the drain valve and 2 x 3/4 bushing on the left side of the boiler. Use a flashlight to inspect the bottom row of pushnipples for accumulated scale or mud. If a significant amount is present, use the following procedure to clean the inside of the heat exchanger:

a) Temporarily install a 1 1/4 inch or larger full port ball valve in place of the boiler drain. Temporarily pipe the outlet of this valve to a location where hot water and steam can be safely discharged.
b) Make sure that this valve is closed and that the water level is at the normal water line.
c) If a king valve is present in the steam main takeoff, close it. Alternatively, temporarily replace enough of the vents on the mains and/or radiators with plugs so that 2-5 psi can be developed when the boiler is fired.
d) Fire the boiler and allow it to steam until 2-5 psi is registered on the gauge.
e) Turn off the burners and immediately fully open the 1-1/4 valve.
f) Allow the boiler to blow down until either the water runs clear or the water level reaches the bottom of the gauge glass.
g) Allow all parts of the boiler to cool to room temperature. Drain the boiler completely and remove the 1-1/4 valve.
h) If significant mud or scale is still present in the bottom of the boiler, repeat steps (b) through (g) until all mud or scale is removed.
i) Once all mud or scale is removed, replace the 1-1/4 valve and temporary blow-down piping with the standard drain valve. After all parts of the boiler are at room temperature, refill the boiler to the normal water line.

14) Place the boiler back in operation using the procedure outlined in “Start-up”. Check the pilot line and any other gas piping disturbed during the inspection process for leaks.

Heat Exchanger Cleaning Procedure

1) Turn off electrical power and gas supply to the boiler
2) Disconnect the damper and vent connector from the boiler.
3) Remove the upper front and top jacket panels. If possible, remove the rear and left side jacket panels
4) Remove the burners.
5) Remove the blocked vent (“spill”) switch
6) Remove the ¼-20 nuts and washers holding the flue collector onto the heat exchanger.
7) Carefully remove the flue collector gasket strips and set them aside.
8) Remove the flue collector from the heat exchanger.
9) Clean the flue passageways using a stiff bristle brush. Be certain that all foreign material is removed from the gaps between the pins
10) Clean the bottom surfaces of the heat exchanger
11) Put a light in the combustion chamber and look through the flue passages from the top to verify that they have been thoroughly cleaned.
12) Replace the flue collector gasket strips. If desired, RTV silicone sealant with a 500F intermittent duty temperature may be substituted for this rope gasket. The flue collector must be thoroughly sealed to the heat exchanger.
13) Replace the ¼-20 nuts and washers that hold down the flue collector
14) Reattach all the jacket components.
15) Reinstall burners, being careful to put the pilot main burner in its original location.
16) Replace the blocked vent switch.
17) Reconnect the damper and vent system.

CAUTION

If, during normal operation, it is necessary to add water to this boiler more frequently than once a month, consult a qualified service technician to check your system for leaks. A leaky system will increase the volume of make-up water supplied to the boiler which can significantly shorten the life of the boiler. Entrained in make-up water are dissolved minerals and oxygen. When the fresh, cool make-up water is heated in the boiler the minerals fall out as sediment and the oxygen escapes as a gas. Both can result in reduced boiler life. The accumulation of sediment can eventually isolate the water from contacting the cast iron. When this happens the cast iron in that area gets extremely hot and may eventually crack. The presence of free oxygen in the boiler creates a corrosive atmosphere which, if the concentration becomes high enough, can corrode the cast iron through from the inside. Since neither of these failures types are a result of a casting defect the warranty does not apply.

WARNING

SOOT DEPOSITS IN THE FLUE PASSAGES ARE A SIGN THAT THE BOILER MAY BE OPERATING AT HIGH CARBON MONOXIDE (CO) LEVELS. AFTER CLEANING THE BOILER OF SOOT DEPOSITS, CHECK THE CO LEVEL IN THE FLUE GAS TO INSURE THAT THE BOILER IS OPERATING PROPERLY.

If it is necessary to check CO, use a combustion analyzer, or other instrument which is designed to measure CO in flue gas. A CO “sniffer” designed for testing CO levels in ambient air cannot be used to check boiler combustion. Take a flue gas sample by inserting a sample probe through the draft diverter opening and into the flue collector so that the sample is taken in the area directly over the heat exchanger. Do not take a sample until the boiler has been firing for at least five minutes. A normal CO reading for an CGSA series boiler is less than 50ppm (0.005%). A reading of more than 100ppm (0.01%) is indicative of a combustion problem.

Some causes of excessive CO include:

- Incorrectly sized main burner orifice for the altitude at which boiler is installed
- Crooked or out-of-round orifice holes (never attempt to drill orifice for this boiler in the field)
- Partially plugged flue passages
- Improper manifold pressure
- Foreign material in burner venturis or burner ports
- Leak in seal between flue collector and heat exchanger
- Inadequate supply of combustion air

XIII Troubleshooting

The following pages contain troubleshooting charts for use in diagnosing control problems. To use these charts, go to the box marked "Start" at the top of the chart on page 32 and follow the appropriate path though the chart until a box with a list of possible causes is reached. If the problem is known to be within the ignition system, go directly to the ignition system troubleshooting guide for the boiler on page 34. In using these charts, the following should be kept in mind:

1) These charts are only meant to be used by a professional heating technician as an aid in diagnosing control problems.

2) Where applicable, follow all precautions outlined in the appropriate lighting instructions on pages 24 - 25.

3) In general, these charts assume that there are no loose or miswired electrical connections. Before using these charts, inspect all electrical connections on the boiler to make sure that they are tight. Also, check the wiring on the boiler against the appropriate wiring diagram in Figures 15.

4) The possible causes at the end of each branch in these charts are not listed in order of likelihood. All controls on the CGSA are tested at least once in the manufacturing process and a defective control or component is generally the least likely cause. Before replacing a component, try to rule out all other possible causes.

5) These troubleshooting charts assume that the vent damper is closed at the beginning of the troubleshooting process. With the 120 volts applied to the boiler and no call for heat, the damper should go to the closed position. If it does not, do the following:

   - Confirm that 120 volts is applied to the boiler and that there is no call for heat.
   - Make sure that the switch on the damper is in the "automatic" position.
   - Unplug the harness from the damper and check for 24 volts across pin #1 (blue) and pin #4 (yellow).
   - If voltage is present, the damper is defective or there is an obstruction in the path of the damper blade.
   - If no voltage is present, there is either a loose connection in the damper harness or the transformer is defective.

6) If the charts indicate that the transformer is defective, it is possible that this transformer has been destroyed by a short circuit in the boiler wiring. Before replacing the transformer, carefully inspect all low voltage wiring on the boiler for places where it is touching the frame of the boiler or wiring on the other side of the transformer.

7) If the charts indicate that the R8225 relay is defective, there is a good chance that a second transformer is present in the thermostat circuit, resulting in the application of 48 volts across the relay coil. In older buildings, this transformer may be hidden in a location far from the boiler. If this second transformer exists, it must be found and removed before the R8225 is replaced.

8) When checking voltage across damper harness pins, be careful not to insert the meter probes into the pins. Doing so may damage the pin, resulting in a loose connection when the harness is reconnected.

Troubleshooting Chart for Boilers Equipped with Hydrolevel CG400A Low Water Cut-offs and Vent Dampers
Caution: Read page 31 before attempting to use this chart

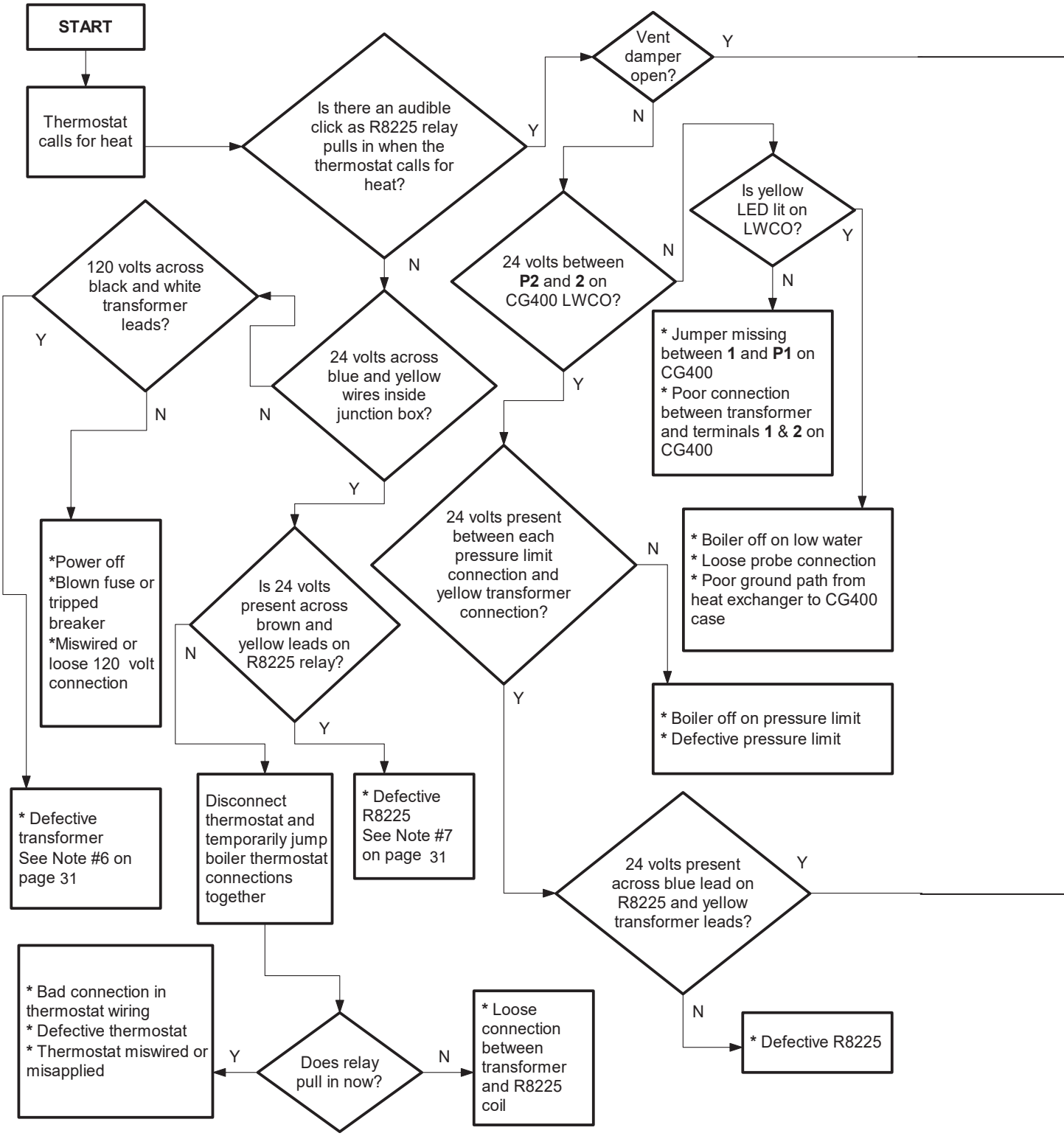

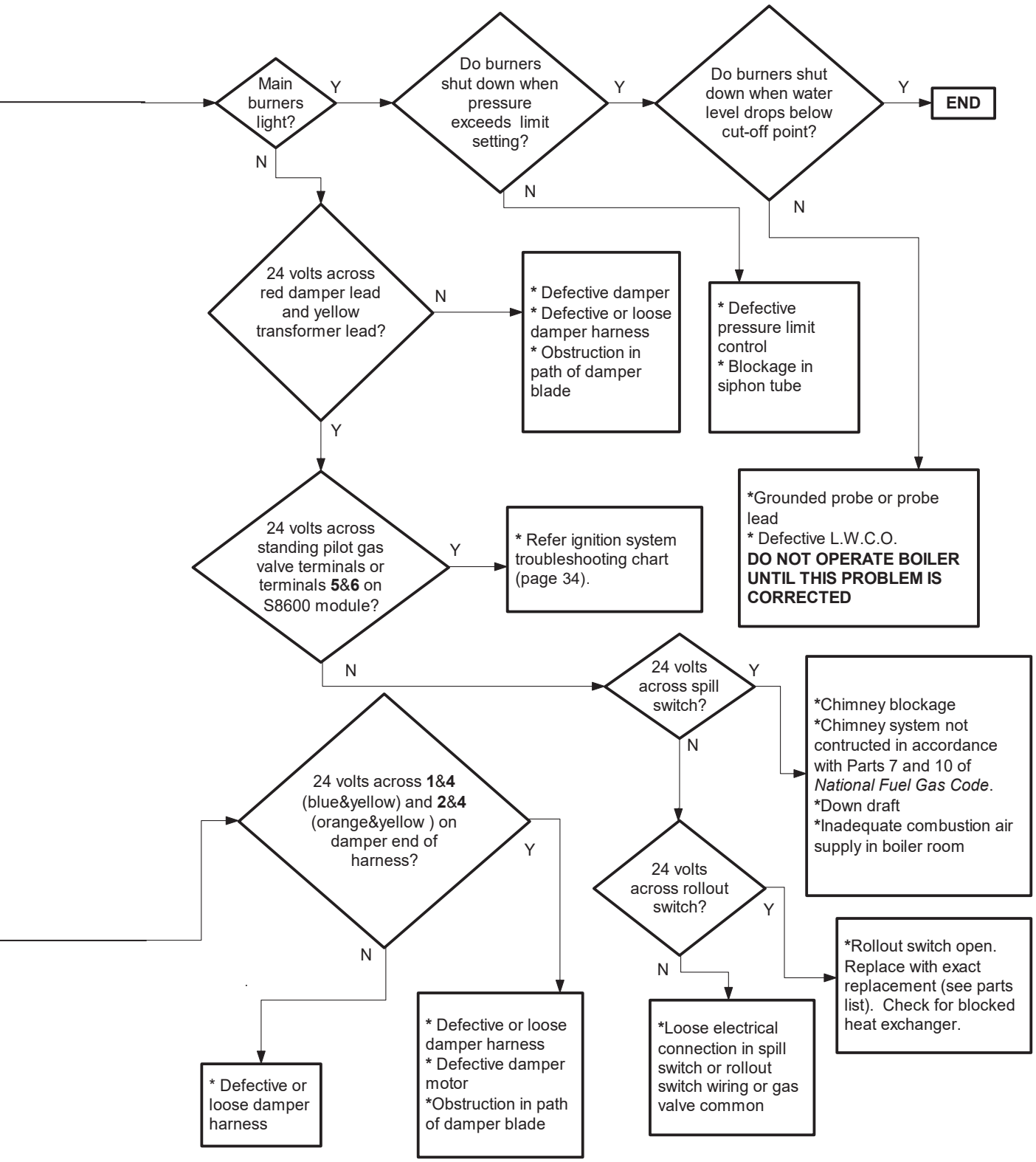
Main burners light?
Y
Do burners shut down when pressure exceeds limit setting?
Y
Do burners shut down when water level drops below cut-off point?
Y
END
N
N
N
24 volts across red damper lead and yellow transformer lead?
N
* Defective damper
* Defective or loose damper harness
* Obstruction in path of damper blade
* Defective pressure limit control
* Blockage in siphon tube
Y
24 volts across standing pilot gas valve terminals or terminals 5&6 on S8600 module?
Y
* Refer ignition system troubleshooting chart (page 34).
*Grounded probe or probe lead
* Defective L.W.C.O.
DO NOT OPERATE BOILER UNTIL THIS PROBLEM IS CORRECTED
N
24 volts across spill switch?
Y
*Chimney blockage
*Chimney system not contructed in accordance with Parts 7 and 10 of National Fuel Gas Code.
*Down draft
*Inadequate combustion air supply in boiler room
N
24 volts across 1&4 (blue&yellow) and 2&4 (orange&yellow) on damper end of harness?
Y
24 volts across rollout switch?
Y
*Rollout switch open. Replace with exact replacement (see parts list). Check for blocked heat exchanger.
N
N
* Defective or loose damper harness
* Defective or loose damper harness
* Defective damper motor
*Obstruction in path of damper blade
*Loose electrical connection in spill switch or rollout switch wiring or gas valve common

Ignition System Troubleshooting Chart

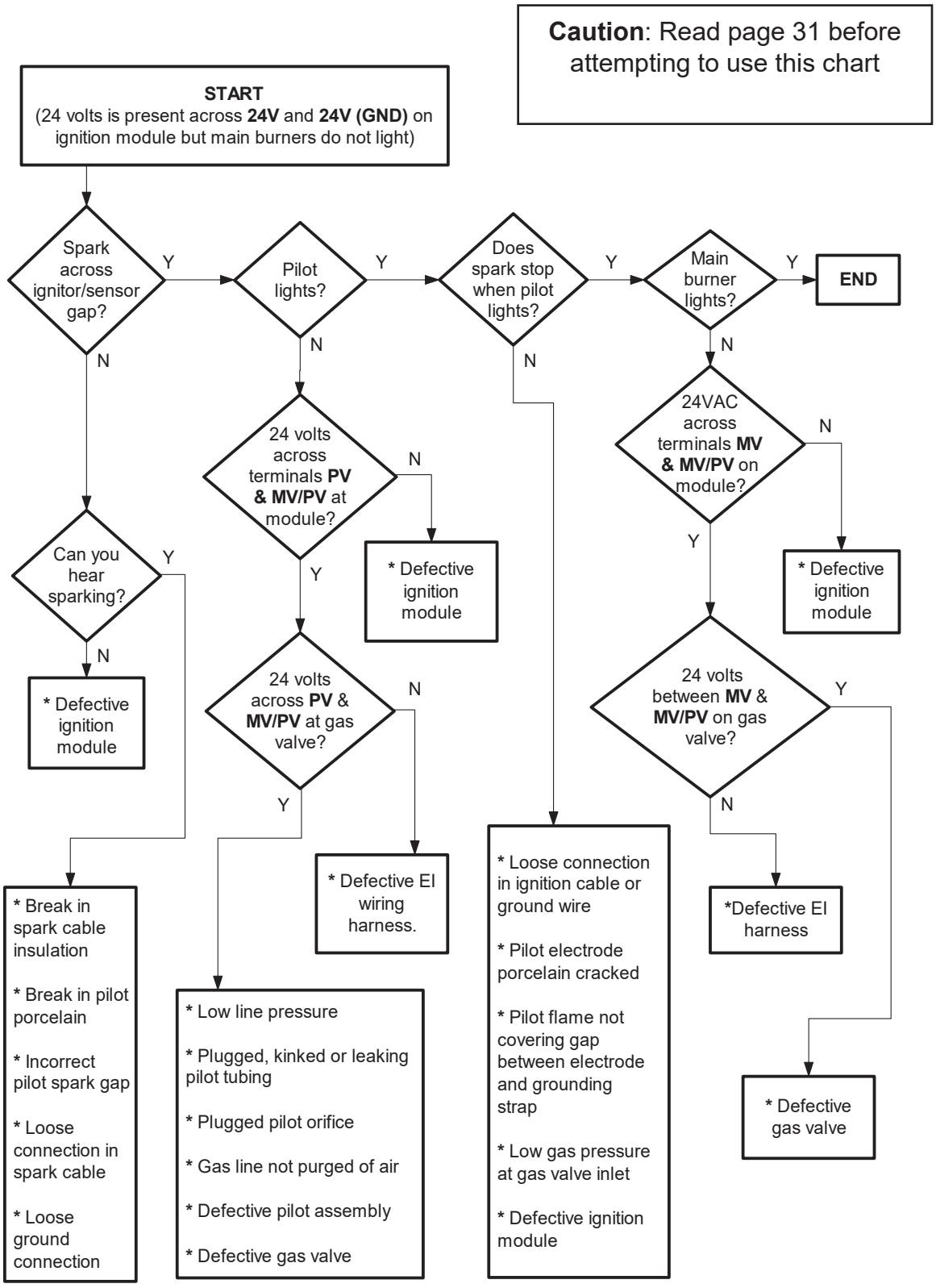

Notes

XIV PARTS

The following parts may be obtained from any National distributor.

KEY #	DESCRIPTION	QTY. OR P.N.	QUANTITY PER BOILER OR PART NUMBER									
			57	85	113	142	171	199	229	240	267	294
1	HEAT EXCHANGER ASSY.	1 ea.	850013	850014	850015	850016	850017	850018	850019	850020	850021	850022
*	LEFT END SECTION	750001	1 ea.	1 ea.	1 ea.	1 ea.	1 ea.	1 ea.	1 ea.	1 ea.	1 ea.	1 ea.
*	RIGHT END SECTION	850002	1 ea.	1 ea.	1 ea.	1 ea.	1 ea.	1 ea.	1 ea.	1 ea.	1 ea.	1 ea.
*	INTERMEDIATE SECTION	750003	1 ea.	2 ea.	3 ea.	4 ea.	5 ea.	6 ea.	7 ea.	8 ea.	9 ea.	10 ea.
*	UPPER PUSHNIPPLE	275075	2 ea.	3 ea.	4 ea.	5 ea.	6 ea.	7 ea.	8 ea.	9 ea.	10 ea.	11 ea.
*	LOWER PUSHNIPPLE	275070	2 ea.	3 ea.	4 ea.	5 ea.	6 ea.	7 ea.	8 ea.	9 ea.	10 ea.	11 ea.
2	BASE TRAY	1 ea.	700643	700644	700645	700646	700647	700648	700649	700650	700651	700652
3	BASE WRAPPER	1 ea.	700663	700664	700665	700666	700667	700668	700669	700670	700671	700672
4	BURNER TRAY (1" BURNERS)	1 ea.	700683	700684	700685	700686	700687	700688	700689	700690	700691	700692
4	BURNER TRAY (40mm BURNERS)	1 ea.	751683	751684	751685	751686	751687	751688	751689			
5	BASE FRONT PANEL ASSY. (INCLUDES INSULATION)	1 ea.	700603	700604	700605	700606	700607	700608	700609	700610	700611	700612
6	BURNER ACCESS PANEL	1 ea.	700623	700624	700625	700626	700627	700628	700629	700630	700631	700632
7	BASE END INSULATION	720601	2 ea.	2 ea.	2 ea.	2 ea.	2 ea.	2 ea.	2 ea.	2 ea.	2 ea.	2 ea.
8	BASE REAR INSULATION	1 ea.	720603	720604	720605	720606	720607	720608	720609	720610	720611	720612
9	BASE LEG ASSY.	700110	4 ea.	4 ea.	4 ea.	4 ea.	4 ea.	4 ea.	4 ea.	4 ea.	6 ea.	6 ea.
10	1/4-20 X 1/2" SELF TAPPING SCREW	900100	20 ea.	20 ea.	20 ea.	20 ea.	21 ea.	21 ea.	21 ea.	21 ea.	25 ea.	25 ea.
11	1/2" x 2" SEALING STRIP	900146	3.7 ft	4.2 ft	4.8 ft	5.3 ft	5.9 ft	6.4 ft	7.0 ft	7.5 ft	8.0 ft	8.5 ft
12	ROLLOUT SWITCH G4AM0600240C	960122	1 ea.	1 ea.	1 ea.	1 ea.	1 ea.	1 ea.	1 ea.	1 ea.	1 ea.	1 ea.
13	ROLLOUT SWITCH BRACKET	900121	1 ea.	1 ea.	1 ea.	1 ea.	1 ea.	1 ea.	1 ea.	1 ea.	1 ea.	1 ea.
14	#8 x 3/4" SELF TAPPING SCREW	90-048	1 ea.	1 ea.	1 ea.	1 ea.	1 ea.	1 ea.	1 ea.	1 ea.	1 ea.	1 ea.
15	#10 x 1/2" SHEET METAL SCREW	90-212	2 ea.	2 ea.	2 ea.	2 ea.	2 ea.	2 ea.	2 ea.	2 ea.	2 ea.	2 ea.
16	5/16 USS FLAT WASHER	900102	4 ea.	4 ea.	4 ea.	4 ea.	4 ea.	4 ea.	4 ea.	4 ea.	4 ea.	4 ea.
17	5/16-18 LOCK NUT	900103	4 ea.	4 ea.	4 ea.	4 ea.	4 ea.	4 ea.	4 ea.	4 ea.	4 ea.	4 ea.
18	5/16-18 x 1-1/4 SELF TAPPING SCREW	900101	4 ea.	4 ea.	4 ea.	4 ea.	4 ea.	4 ea.	4 ea.	4 ea.	4 ea.	4 ea.
20	DRAFT DIVERTER ASSEMBLY	1 ea.	850123	850124	850125	850126	850127	850128	850129	850130	850131	850132
21	1/2" x 1" SEALING STRIP	900145	3 ft	3.3 ft	3.5 ft	3.8 ft	4.1 ft	4.4 ft	4.6 ft	4.9 ft	5.2 ft	5.5 ft
22	1/4-20 x 1-1/4" CARRIAGE BOLT	90-201	4 ea.	4 ea.	4 ea.	4 ea.	4 ea.	4 ea.	4 ea.	4 ea.	4 ea.	4 ea.
23	1/4" USS FLAT WASHER	90-215	4 ea.	4 ea.	4 ea.	4 ea.	4 ea.	4 ea.	4 ea.	4 ea.	4 ea.	4 ea.
24	1/4-20 WING NUT	900125	4 ea.	4 ea.	4 ea.	4 ea.	4 ea.	4 ea.	4 ea.	4 ea.	4 ea.	4 ea.
25	BLOCKED VENT SWITCH ASSY. (INCLUDES MOUNTING BRACKET)	960123	1 ea.									
25	BLOCKED VENT SWITCH ASSY. (INCLUDES MOUNTING BRACKET)	960126		1 ea.	1 ea.	1 ea.	1 ea.	1 ea.	1 ea.	1 ea.	1 ea.	1 ea.
26	FLUE BAFFLE	850100								9 ea.	10 ea.	11 ea.

* NOT PICTURED

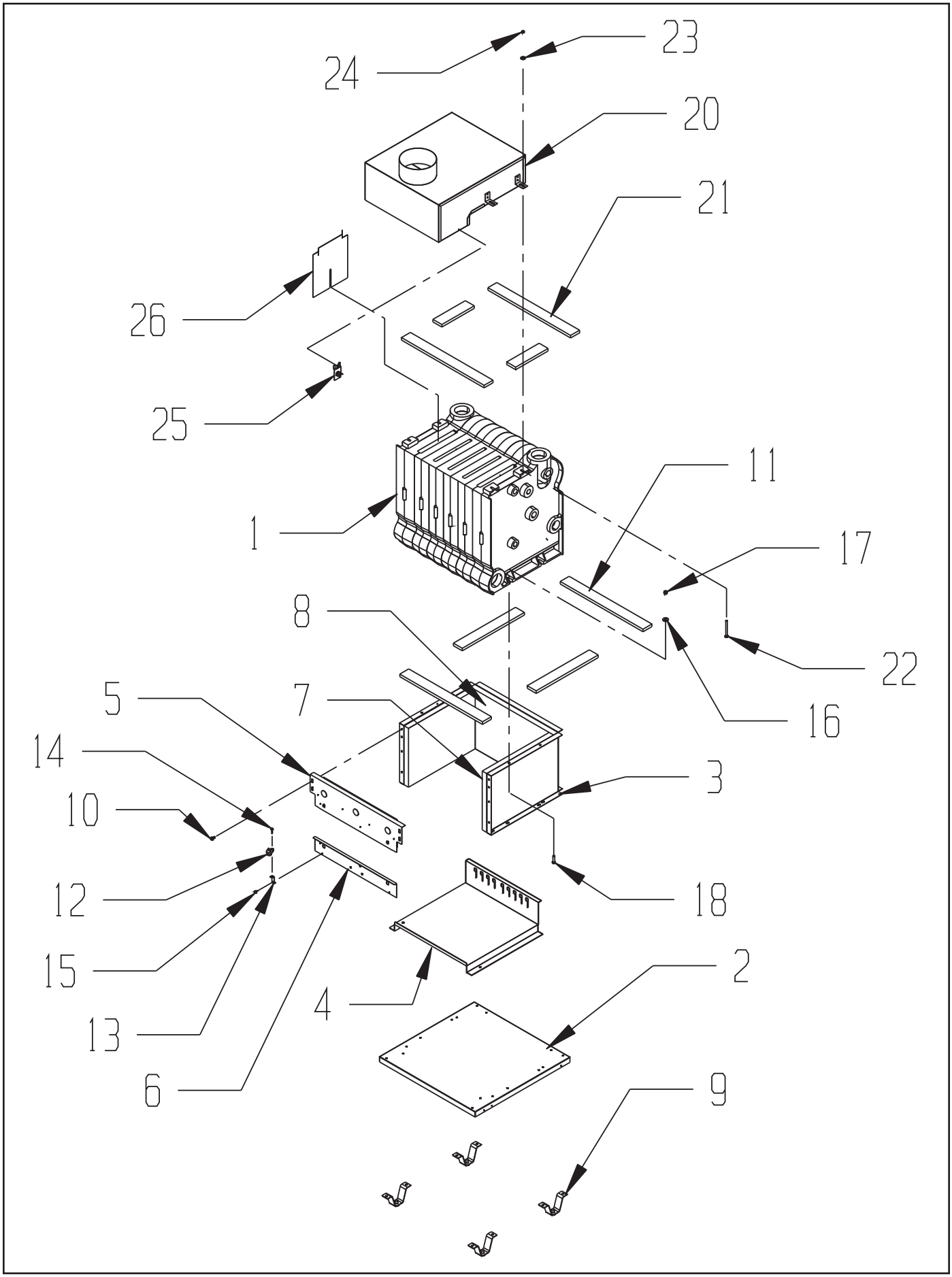
24
23
20
21
26
25
1
11
17
8
22
16
5
7
14
3
10
18
12
15
4
2
13
6
9

KEY #	DESCRIPTION	QTY. OR P.N.	QUANTITY PER BOILER OR PART NUMBER									
			57	85	113	142	171	199	229	240	267	294
41	1" BURNER WITH PILOT BRACKET (Q348 PILOTS)	150500	1 ea.	1 ea.	1 ea.	1 ea.	1 ea.	1 ea.	1 ea.	1 ea.	1 ea.	1 ea.
42	1" BURNER LESS PILOT BRACKET	150501	2 ea.	4 ea.	6 ea.	8 ea.	11 ea.	13 ea.	15 ea.	17 ea.	20 ea.	22 ea.
43	MANIFOLD (1" BURNERS)	1 ea.	700153	700154	700155	700156	700157	700158	700159	700160	700161	700162
44	NAT GAS ORIFICE (#44 DRILL SIZE)	950300	3 ea.	5 ea.								
44	NAT GAS ORIFICE (#45 DRILL SIZE)	950301			7 ea.	9 ea.						
44	NAT GAS ORIFICE (#47 DRILL SIZE)	950303					12 ea.	14 ea.	16 ea.			
44	NAT GAS ORIFICE (#48 DRILL SIZE)	950304								18 ea.	21 ea.	23 ea.
44	**LP GAS** ORIFICE (#54 DRILL SIZE)	950329	3 ea.									
44	**LP GAS** ORIFICE (#55 DRILL SIZE)	950330		5 ea.								
44	**LP GAS** ORIFICE (#1.25mm DRILL SIZE)	950336			7 ea.	9 ea.	12 ea.	14 ea.	16 ea.			
45	GAS VALVE (E.I., NAT GAS)	3507020 (VR8204C6000)	1 ea.	1 ea.	1 ea.	1 ea.						
45	GAS VALVE (E.I., NAT GAS)	3507120 (VR8304P4298)					1 ea.	1 ea.	1 ea.	1 ea.	1 ea.	
45	GAS VALVE (E.I., NAT GAS) (ROBERTSHAW 7000DERHC)	3507310										1 ea.
45	GAS VALVE (E.I. PILOT, **LP GAS**)	3507220 (VR8204C6018)	1 ea.	1 ea.	1 ea.	1 ea.						
45	GAS VALVE (E.I., **LP GAS**)	3507240 (VR8304P4280)					1 ea.	1 ea.	1 ea.			
46a	PILOT ASSY. (E.I., NAT GAS)	35-4700 (Q348A1275)	1 ea.	1 ea.	1 ea.	1 ea.	1 ea.	1 ea.	1 ea.	1 ea.	1 ea.	1 ea.
46a	PILOT ASSY. (E.I., **LP GAS**)	35-4600 (Q348A1259)	1 ea.	1 ea.	1 ea.	1 ea.	1 ea.	1 ea.	1 ea.			
47a	IGNITION CABLE	1 ea.	3501124	3501124	3501124	3501130	3501130	3501130	3501136	3501136	3501136	3501136
48	PILOT TUBING***	1 ea.	90-042	90-042	90-042	90-043	90-043	90-043	900041	900041	900041	
49	1/8 SHORT FERRULE (INCLUDED WITH GAS VALVE)	35-1600 (392449)	1 ea.	1 ea.	1 ea.	1 ea.	1 ea.	1 ea.	1 ea.	1 ea.	1 ea.	
50	1/8 LONG FERRULE (INCLUDED WITH PILOT ASSEMBLY)	35-1650 (392449-4)	1 ea.	1 ea.	1 ea.	1 ea.	1 ea.	1 ea.	1 ea.	1 ea.	1 ea.	
51a	KF24 PILOT ORIFICE (Q348 PILOT NAT GAS) - INCLUDED WITH PILOT ASSY.		1 ea.	1 ea.	1 ea.	1 ea.	1 ea.	1 ea.	1 ea.	1 ea.	1 ea.	1 ea.
51a	K16 PILOT ORIFICE (Q348 PILOT **LP GAS**) - INCLUDED WITH PILOT ASSY.		1 ea.	1 ea.	1 ea.	1 ea.	1 ea.	1 ea.	1 ea.			

*** 1/4" PILOT TUBING USED WITH ROBERTSHAW VALVES - PROCURE LOCALLY

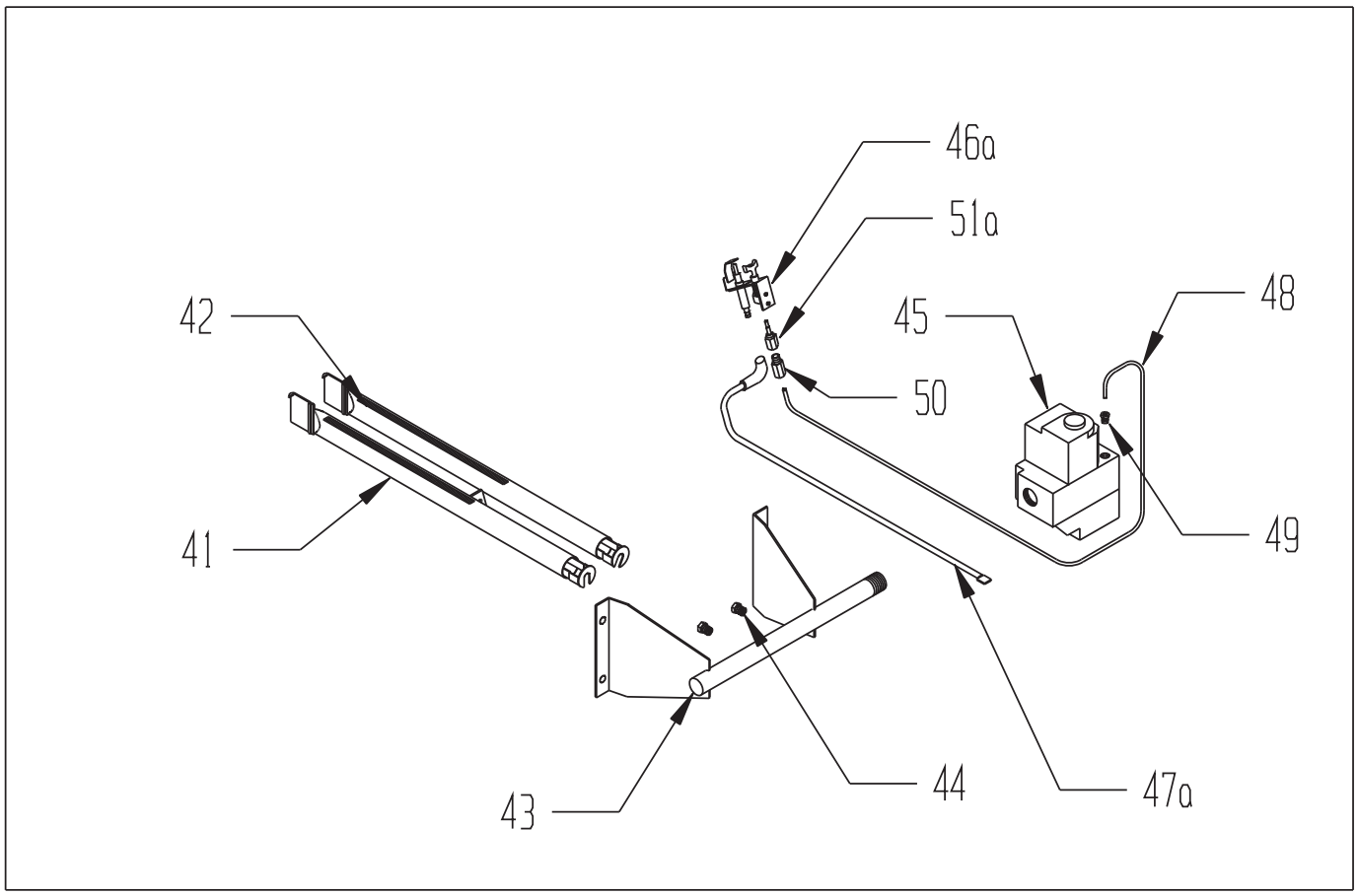
46a
51a
42
45
48
50
41
49
44
47a
43

KEY #	DESCRIPTION	QTY. OR P.N.	QUANTITY PER BOILER OR PART NUMBER									
			57	85	113	142	171	199	229	240	267	294
75	LEFT SIDE JACKET PANEL	1 ea.	850301	850301	850301	850301	8503012	8503012	8503012	8503015	8503015	8503015
76	RIGHT SIDE JACKET PANEL	1 ea.	850300	850300	850300	850300	8503002	8503002	8503002	8503005	8503005	8503005
77	REAR JACKET PANEL	1 ea.	850303	850304	850305	850306	850307	850308	850309	850310	850311	850312
78	TOP JACKET PANEL	1 ea.	850323	850324	850325	850326	850327	850328	850329	850330	850331	850332
79	LOWER FRONT PANEL	1 ea.	850363	850364	850365	850366	850367	850368	850369	850320	850321	850322
80	UPPER FRONT PANEL	1 ea.	850353	850354	850355	850356	850357	850358	850359	850360	850361	850362
81	DIVERTER PANEL	1 ea.	850373	850374	850375	850376	850377	850378	850379	850380	850381	850382
82	VESTIBULE PANEL	1 ea.	850383	850384	850385	850386	850387	850388	850389	850390	850391	850392
83	HORIZONTAL JACKET CLIP	800340	2 ea.	2 ea.	2 ea.	2 ea.	2 ea.	2 ea.	2 ea.	2 ea.	2 ea.	2 ea.
84	VERTICAL JACKET CLIP	800341	2 ea.	2 ea.	2 ea.	2 ea.	2 ea.	2 ea.	2 ea.	2 ea.	2 ea.	2 ea.
85	#10 X 1/2" SHEET METAL SCREW	90-212	28 ea.	28 ea.	28 ea.	28 ea.	28 ea.	28 ea.	28 ea.	28 ea.	28 ea.	28 ea.
86	DOOR KNOB	90-210	2 ea.	2 ea.	2 ea.	2 ea.	2 ea.	2 ea.	2 ea.	2 ea.	2 ea.	2 ea.
87	8-32 X 1/4" H.W.H. SCREW	90-211	2 ea.	2 ea.	2 ea.	2 ea.	2 ea.	2 ea.	2 ea.	2 ea.	2 ea.	2 ea.
*	IGNITION MODULE (E.I. BOILERS)	3505025 (UT 1003-664A)	1 ea.	1 ea.	1 ea.	1 ea.	1 ea.	1 ea.	1 ea.	1 ea.	1 ea.	1 ea.
*	MODULE BRACKET (E.I. BOILERS)	905000	1 ea.	1 ea.	1 ea.	1 ea.	1 ea.	1 ea.	1 ea.	1 ea.	1 ea.	1 ea.
88	VENT DAMPER	1 ea.	96-030	96-031	96-032	96-032	96-033	96-033	96-035	96-035	96-036	96-036
89	GLASS SET	950077	1 ea.	1 ea.	1 ea.	1 ea.	1 ea.	1 ea.	1 ea.	1 ea.	1 ea.	1 ea.
90a	PROBE TYPE L.W.C.O. (CG400)	400821	1 ea.	1 ea.	1 ea.	1 ea.	1 ea.	1 ea.	1 ea.	1 ea.	1 ea.	1 ea.
91	PRESSURE GUAGE	95-070	1 ea.	1 ea.	1 ea.	1 ea.	1 ea.	1 ea.	1 ea.	1 ea.	1 ea.	1 ea.
92	3/4" SAFETY VALVE (15 psi)	95-079	1 ea.	1 ea.	1 ea.	1 ea.	1 ea.	1 ea.	1 ea.	1 ea.	1 ea.	1 ea.
93	90 DEGREE PIG-TAIL	95-060B	1 ea.	1 ea.	1 ea.	1 ea.	1 ea.	1 ea.	1 ea.	1 ea.	1 ea.	1 ea.
94	PRESSURE LIMIT (L404F1367)	3503800	1 ea.	1 ea.	1 ea.	1 ea.	1 ea.	1 ea.	1 ea.	1 ea.	1 ea.	1 ea.
95	3/4" BOILER DRAIN	95-041	1 ea.	1 ea.	1 ea.	1 ea.	1 ea.	1 ea.	1 ea.	1 ea.	1 ea.	1 ea.
96	JUNCTION BOX	960155	1 ea.	1 ea.	1 ea.	1 ea.	1 ea.	1 ea.	1 ea.	1 ea.	1 ea.	1 ea.
*	TRANSFORMER MOUNTING PLATE	960156	1 ea.	1 ea.	1 ea.	1 ea.	1 ea.	1 ea.	1 ea.	1 ea.	1 ea.	1 ea.
98	24V TRANSFORMER (AT140D1012)	3502300	1 ea.	1 ea.	1 ea.	1 ea.	1 ea.	1 ea.	1 ea.	1 ea.	1 ea.	1 ea.
99	8-32 X 1/2" SELF TAPPING SCREW	90-223	4 ea.	4 ea.	4 ea.	4 ea.	4 ea.	4 ea.	4 ea.	4 ea.	4 ea.	4 ea.
100	SPST RELAY (R8225B1049)	3505540	1 ea.	1 ea.	1 ea.	1 ea.	1 ea.	1 ea.	1 ea.	1 ea.	1 ea.	1 ea.
*	DAMPER WIRE HARNESS	9601300	1 ea.	1 ea.	1 ea.	1 ea.	1 ea.	1 ea.	1 ea.	1 ea.	1 ea.	1 ea.
*	BLOCKED VENT SWITCH HARNESS	9601270	1 ea.	1 ea.	1 ea.	1 ea.	1 ea.	1 ea.	1 ea.	1 ea.	1 ea.	1 ea.
*	J-BOX - R.O. SWITCH HARNESS	9601280	1 ea.	1 ea.	1 ea.	1 ea.	1 ea.	1 ea.	1 ea.	1 ea.	1 ea.	1 ea.
*	CG400 L.W.C.O - J-BOX HARNESS	9601405	1 ea.	1 ea.	1 ea.	1 ea.	1 ea.	1 ea.	1 ea.	1 ea.	1 ea.	1 ea.
*	PRESSURE LIMIT - J-BOX HARNESS	9601210	1 ea.	1 ea.	1 ea.	1 ea.	1 ea.	1 ea.	1 ea.	1 ea.	1 ea.	1 ea.
*	INTERMITTENT IGNITION HARNESS	9601100	1 ea.	1 ea.	1 ea.	1 ea.	1 ea.	1 ea.	1 ea.	1 ea.	1 ea.	1 ea.
*	RED JUMPER HARNESS (**LESS-DAMPER BOILERS ONLY**)	9601355								1 ea.	1 ea.	1 ea.

* NOT PICTURED

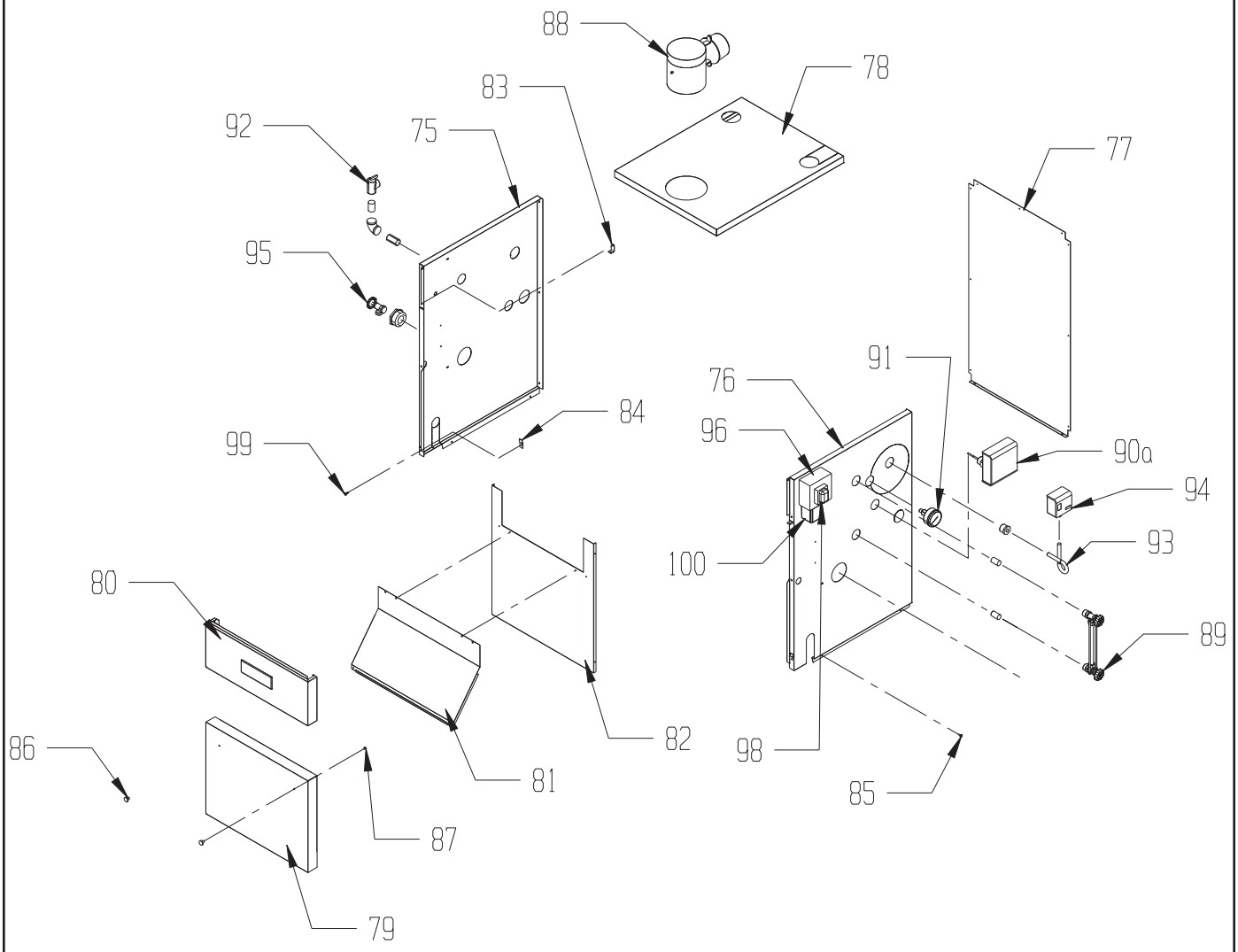
88
78
83
92
75
77
95
91
76
84
96
90a
99
94
100
93
80
89
82
86
81
98
87
85
79

Crown Boiler Company
3633 I Street
Philadelphia, PA 19134

P/N 980027
11/17 Rev. 0